E


| | | |
|---|---|---|
| Introduction | | E2 |
| **Toolholders for back turning** | | **E12** |
| TKF / TKFB insert | KTKF | E15 |
| | KTKF Goose-neck holder / KTKF-Y Y-axis toolholder | E16 |
| ABS15 insert | AABS-40F / SABS-40F | E20 |
| ABW15 insert | AABW-40F / SABW-40F | E21 |
| ABW23 insert | AABW-50F / SABW-50F | E22 |
| **Goose-neck toolholders** | | **E23** |
| DC insert | SDJC | E23 |
| VP insert | SVLP | E24 |
| **External toolholders** | | **E26** |
| CC insert | ACLC-FF / SCLC-FF | E26 |
| | SCLC-FFJCTM | E27 |
| | SCLC | E28 |
| DC insert | ADJC-FF / SDJC-FF | E29 |
| | SDJC-FFJCTM | E30 |
| | SDJC | E31 |
| | SDJC-FF-Y | E32 |
| | SDLC-FF / SDXC | E34 |
| | SDNC-F / SDNC | E35 |
| DP insert | SDLP-FF | E37 |
| TC insert | STGC | E38 |
| TP insert | STGP | E39 |
| VB insert | AVJB-FF / SVJB-FF / SVJB-FFJCTM / SVJB / SVPB / SVVB | E40 |
| VC insert | SVJC-FF / SVLC-FF / SVPC-FF / SVVC | E44 |
| VP insert | SVJP-FF / SVJP-FFJCTM / SVLP-FF / SVPP-FF | E47 |
| ZB insert | SZLB / SZPB / SZVBN | E52 |
| **External sleeve holder** | | **E54** |
| CC insert | S...SCLC | E54 |
| DC insert | S...SDUC/S...SDLC | E55 |
| VB insert | S...SVUB | E58 |
| VC insert | S...SVUC | E59 |
| **Toolholders for small double sided tooling** | | **E60** |
| CN insert | SCLN-FF | E60 |
| DN insert | SDLN-FF | E61 |
| TN insert | STLN-FF | E62 |
| **Toolholders for double sided tooling for automatic lathes** | | **E63** |
| CN insert | PCLN-FF | E63 |
| TN insert | PTLN-FF | E64 |
| **Recommended cutting conditions** | | **E65** |

# Summary of External turning

## External / Copying

| ADJC-FF | SDJC-FF(JCTM)<br>SDJC-FF-Y | SDJC | SDLC-FF<br>SDLP-FF | SDLN-FF | SDNC-F | SDNC |
|---|---|---|---|---|---|---|
| Back clamp<br>Without offset | Screw clamp<br>Without offset | Screw clamp | Screw clamp<br>Without offset | Screw clamp<br>Without offset | Screw clamp | Screw clamp |
| E29 | E29, E30, E32 | E31 | E34, E37 | E61 | E35 | E35 |

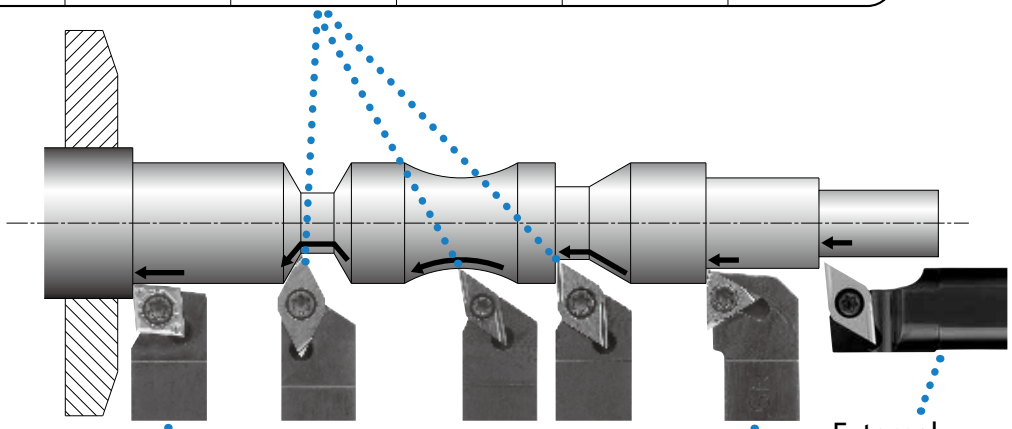

## External / Facing

| ACLC-FF | SCLC-FF(JCTM) | SCLC | SCLN-FF |
|---|---|---|---|
| Back clamp<br>Without offset | Screw clamp<br>Without offset | Screw clamp | Screw clamp<br>Without offset |
| E26 | E26, E27 | E28 | E60 |

## External

| STGC(P) | STLN-FF |
|---|---|
| Screw clamp | Screw clamp<br>Without offset |
| E38, E39 | E62 |

## External Sleeve holder

| S-SDLC |
|---|
| Screw clamp<br>Shank dia.<br>ø12~ø25.4 |
| E56 |

## Tooling example (1) CNC Automatic lathe (Gang type)

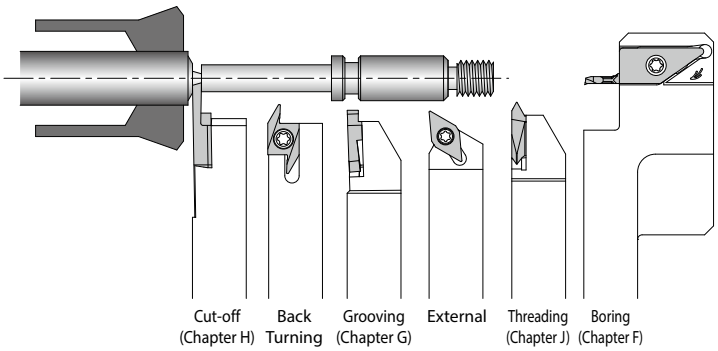


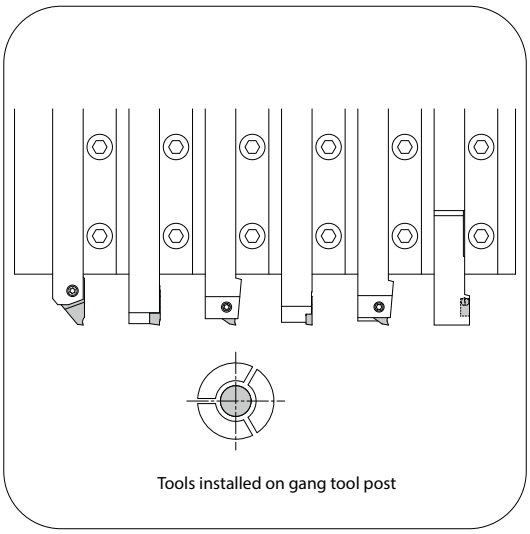

## Back turning

| 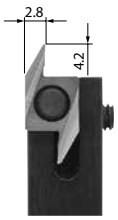 | | 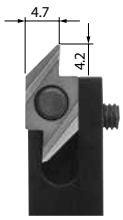 | | 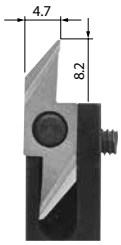 | 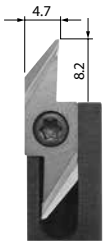 | |
|---|---|---|---|---|---|---|
| AABS-40F | SABS-40F | AABW-40F | SABW-40F | AABW-50F | SABW-50F | KTKF |
| Back clamp<br>Edge width : 2.8<br>ap : ~4.0 | Screw clamp<br>Edge width : 2.8<br>ap : ~4.0 | Back clamp<br>Edge width : 4.7<br>ap : ~4.0 | Screw clamp<br>Edge width : 4.7<br>ap : ~4.0 | Back clamp<br>Edge width : 4.7<br>ap : ~5.0 | Screw clamp<br>Edge width : 4.7<br>ap : ~5.0 | Screw clamp<br>Edge width : 1.5~3.8<br>Max. ap : 1.8~5.5 |
| E20 | E20 | E21 | E21 | E22 | E22 | E15, E16 |

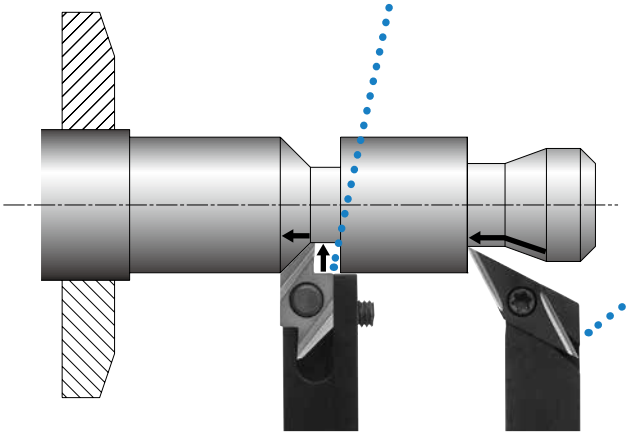

## External / Facing / Copying / Undercutting

| | |
|---|---|
| SVPB | SVPP-FF |
| Screw clamp | Screw clamp<br>Without offset |
| E42 | E49 |

## Tooling example (2) CNC Automatic lathe (Gang type)

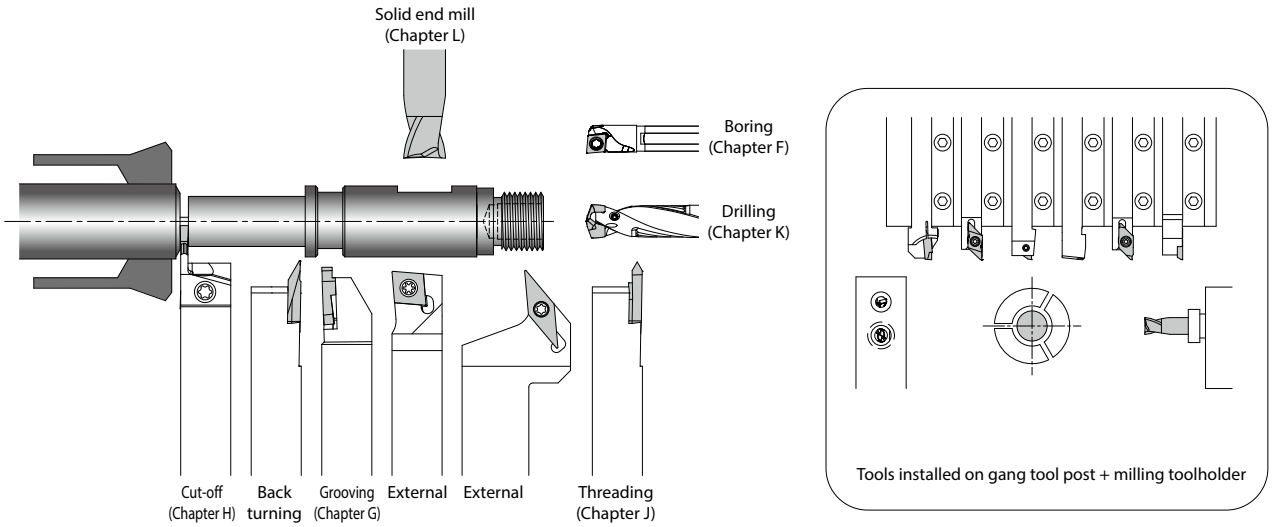

## How to use goose-neck holder for swiss tool automatic lathe (Gang type tool post)

## Swiss tool automatic lathe (Guide bush system)

Goose-neck holder is applicable to automatic lathes whose toolholder does not move to longitudinal direction (Z-axis direction).

In case of machining with the conventional toolholder

Goose-neck holder is applicable to automatic lathe that toolholder does not move to longitudinal direction (Z-axis direction)

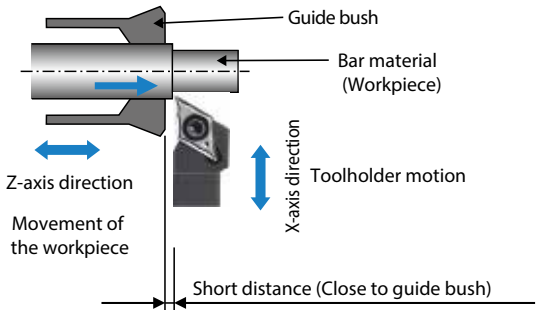


### Problems of machining with the conventional toolholder

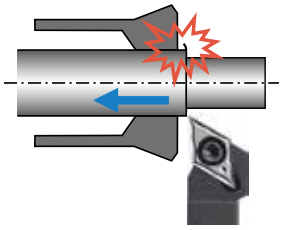

**Case 1**
During multiple passes, when bar material returns into guide bush, the burr contacts and breaks guide bush.

**Case 2**
The workpiece burr contacts the guide bush and causes dimensional variation.

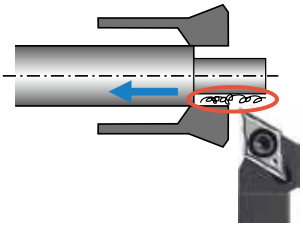

**Case 3**
During multiple passes, when bar material returns into guide bush, the chips contacts and breaks guide bush.

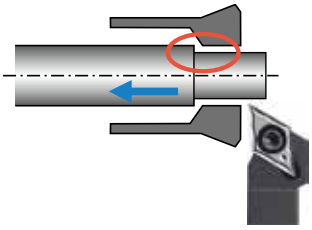

**Case 4**
Bar material deviation from the guide bush disables machining.

### Problems of toolholder Installation

When using a conventional toolholder

1. Additional space is required for an adapter.
2. Toolholder's handling is difficult due to limited space.
3. Necessary to buy an adapter.
4. An adapter may interfere with the next tool post.

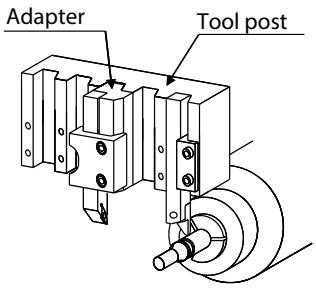

## Advantages of goose-neck holder

When using goose-neck holder

1. Machining precision improves by additional finishing process.
2. Chips do not come into the guide bush.
3. Better chip control due to large chip evacuation space.

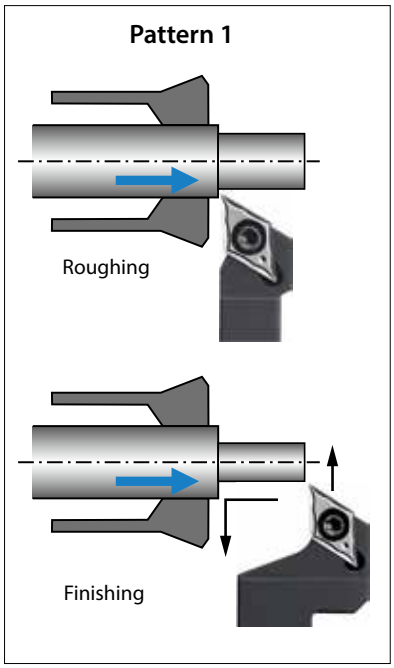


Available for machining after roughing without returning bar material into guide bush, preventing damages and improving precision.

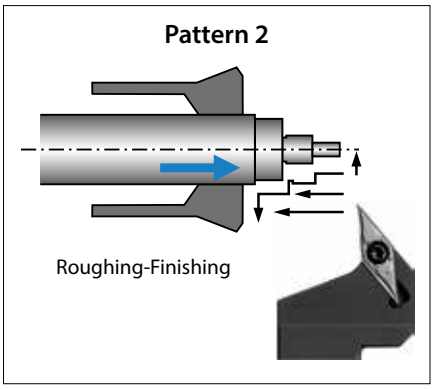


Available for roughing and finishing with one Goose-neck holder.

### For better chip control

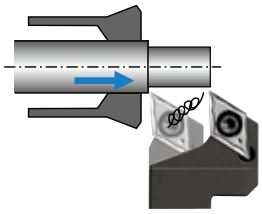

Optimum cutting edge position and large space for efficient chip evacuation.

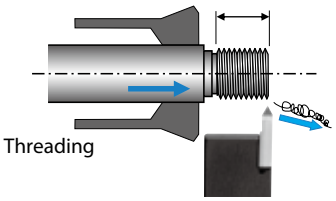


With conventional threading toolholders, chip biting into guide bush can cause damages on threads.

### Advantages of Toolholder installation - When using a goose-neck holder

1. Maximum number of toolholders can be attached.
2. No interference with next tool post.

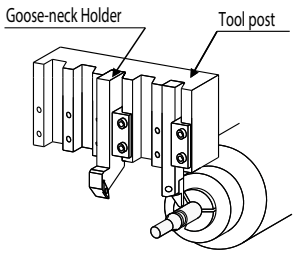

# Summary of External turning

## External sleeve holder

| | | | |
|---|---|---|---|
| | | | |
| S-SCLC | S-SDUC | S-SDLC | S-SVUB(C) |
| Screw clamp<br>Shank dia. ø12~ø25.4 | Screw clamp<br>Shank dia. ø14~ø25.4 | Screw clamp<br>Shank dia. ø12~ø25.4 | Screw clamp<br>Shank dia. ø12~ø25.4 |
| E54 | E55 | E56 | E58, E59 |

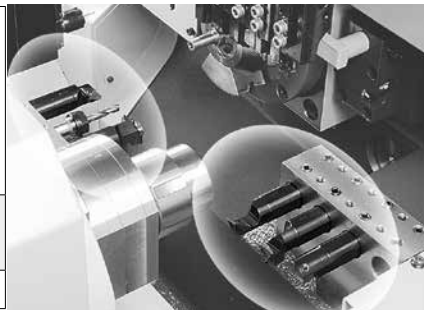

For tooling layout and automatic lathe list by manufacturer, See page R46~R54

● Finishing by sleeve holder

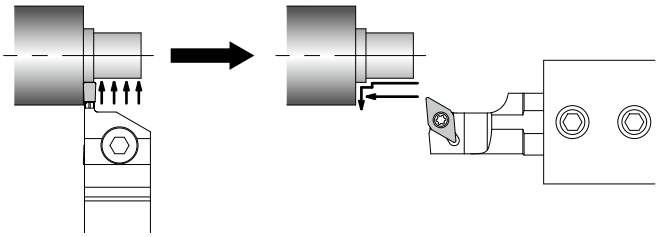

1) Roughing by grooving toolholder
2) Finishing by sleeve holder improves chip control and reduces cutting time

## Tooling example (3) CNC automatic lathe (Opposed gang type)

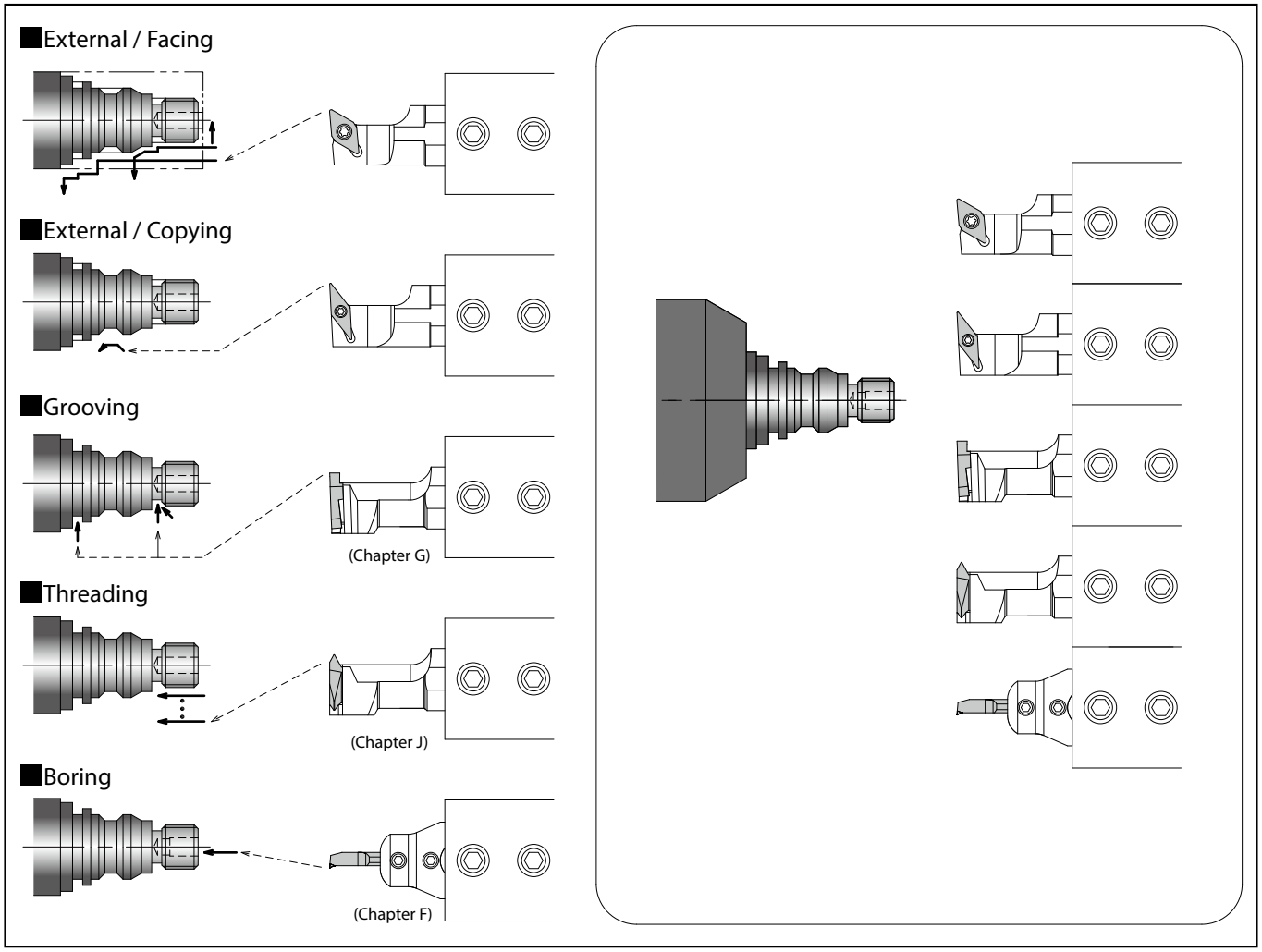


For tooling layout and automatic lathe list by manufacturer, See page R46~R54

## Toolholders for small double sided tooling (Screw clamp)

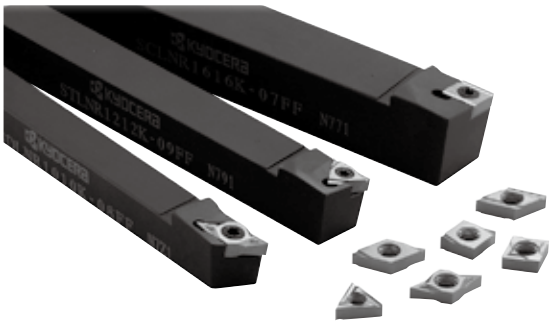

| Applications | External / Facing | External / Up Facing | External / Copying |
|---|---|---|---|
| Cutting edge angle | 95° | 95° | 95° |
| Screw clamp (Without offset) | 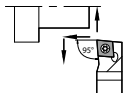 SCLN | 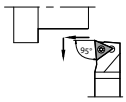 STLN | 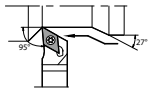 SDLN |
| See page | E60 | E62 | E61 |

Newly designed negative inserts (double-sided) enable high productivity and stability by economical doubled insert edge numbers
Sharp cutting equivalent to positive inserts (single-sided)

## Toolholder for double sided tooling for automatic lathe
(Lever Lock, Without Offset)

| Applications | External / Facing | External / Up Facing |
|---|---|---|
| Cutting edge angle | 95° | 95° |
| Lever lock (Without offset) | 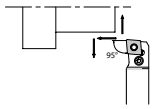 PCLN-FF | 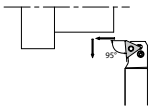 PTLN-FF |
| See page | E63 | E64 |

The lever lock type is available for small parts machining for external machining

## Tooling example (4)

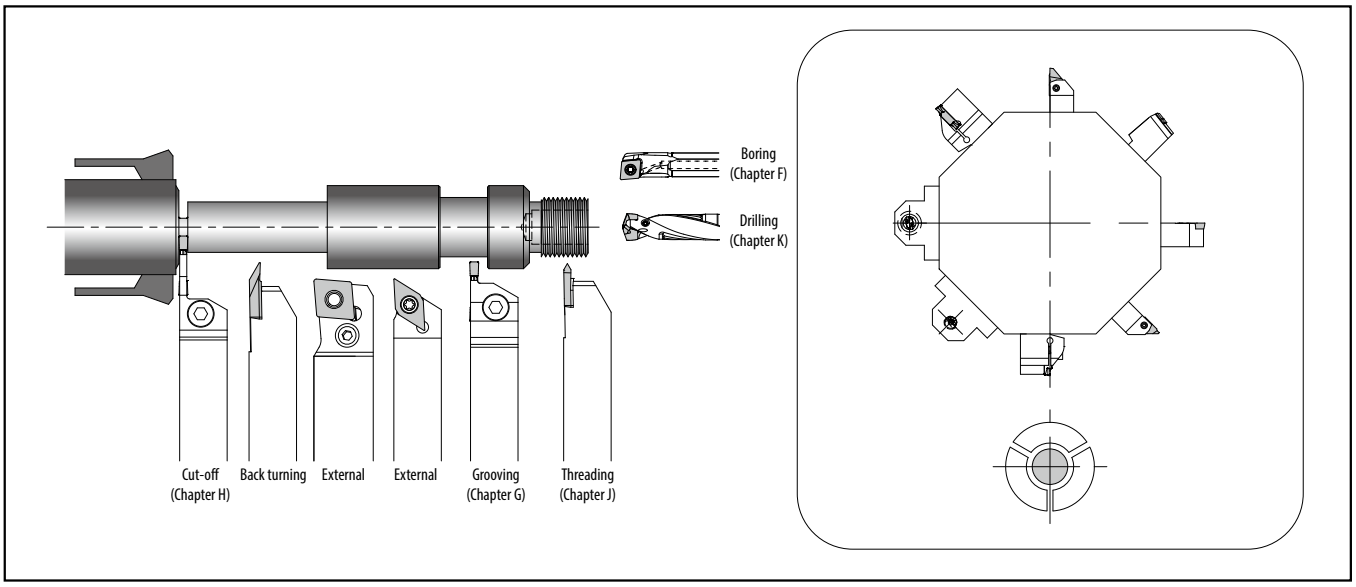


For tooling layout and automatic lathe list by manufacturer, See page R46~R54

JCTM Series direct coolant holder for small parts machining

# JCTM Series

**Applicable to different supply styles.**
**Supports internal coolant with/without piping system.**
**Lineup of turning, grooving (KGBF), and cut-off (KGZ/KGD/KTKF) holders**



## 1 Using internal coolant to enhance tool performance

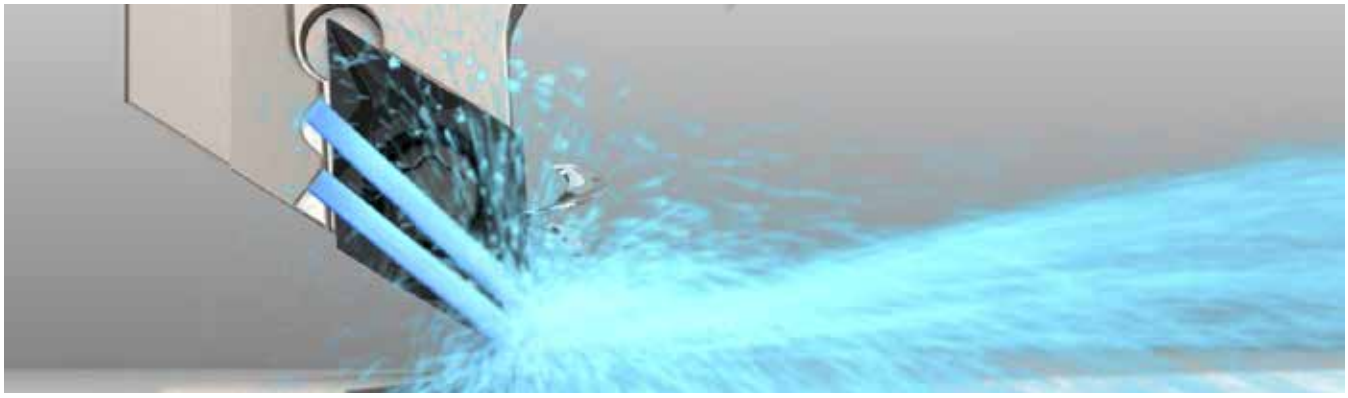

CG Image

**Challenges**

- Difficulty in automatic operation due to sudden chip entanglement
- Insert change is not enough to extend tool life

**Solution**

- The JCTM series is compatible with internal coolant supply system in a wide range of machines and also works under normal pressure
- Reduces down time by improving chip control and reduces cost by extending tool life

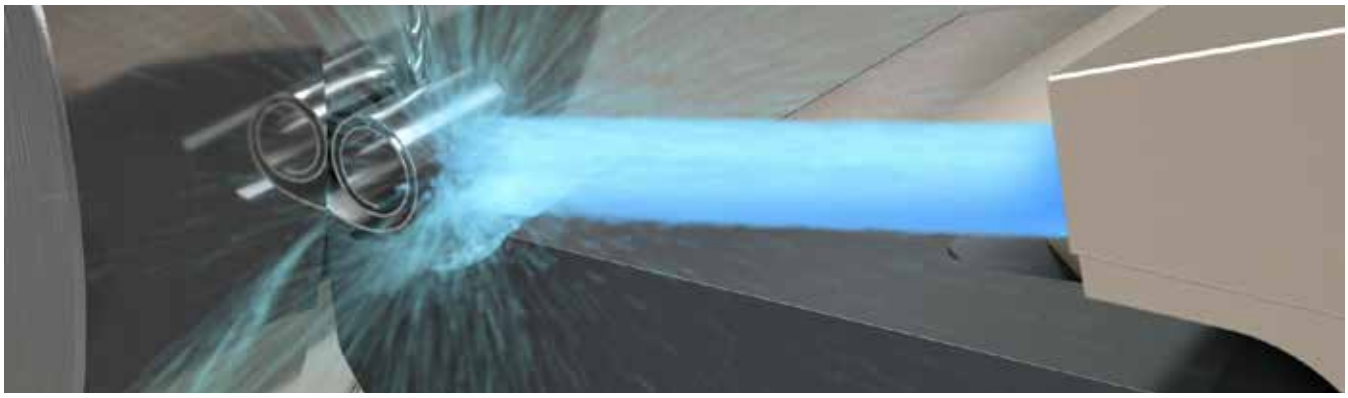

CG Image

### Switching to internal coolant toolholder reduces chip entanglement

**Internal coolant** (2.5 MPa)

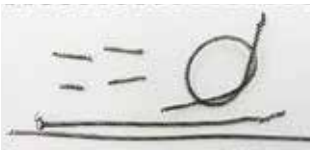

**External coolant**

**Pin Alloy tool steel** (SKS93, JIS)
Vc = 180 m/min, ap = 1.4 mm
f = 0.13 mm/rev, wet
SDJC / DCMT11T304 type (User evaluation)

## 2 Applicable to different supply styles. Supports internal coolant with/without piping system

### Internal coolant without piping

*When the tool turret supports direct coolant

NEW

Coolant is supplied directly from tool turret into the holder. No need for piping just by installing tools

**Applicable to wide range of machines**

**The tool turret is optional. Please contact our company sales representative for details.**

**CITIZEN MACHINERY CO., LTD.** (L20, D25, M32)
**STAR MICRONICS CO., LTD.** (SB-R series, SR series, SV series)
**TSUGAMI CORPORATION** (S205/206-Ⅱ □16 type, S205A/206A-Ⅱ □16 type)

**Compatible with various machine including the above. Toolholders can be customized as well.**

(Random order)
Based on Kyocera survey in January 2021

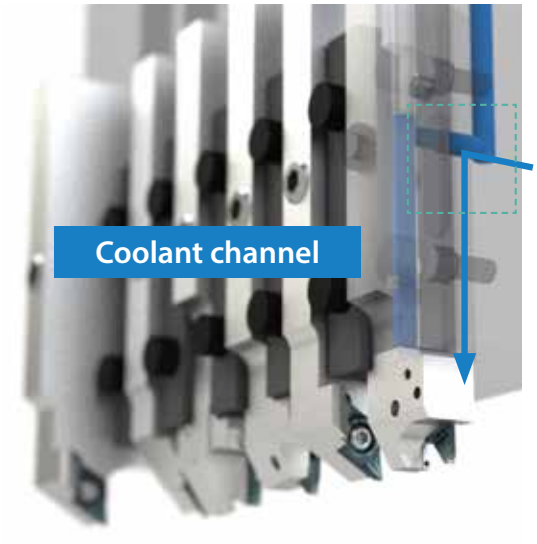


### Point

Appropriate hole design to reduce energy loss based on deep analysis

Analysis image (Internal evaluation)

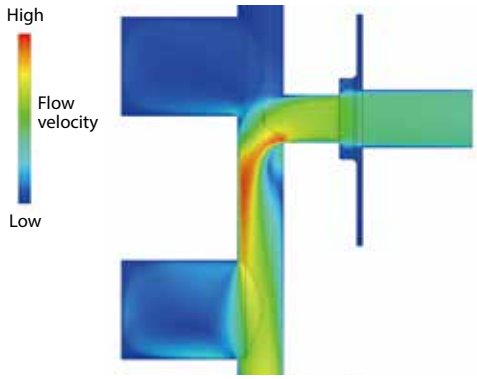


### Internal coolant with piping

Compatible with internal coolant on any machine with standard piping parts

Commercial piping parts are available when using at normal pressure

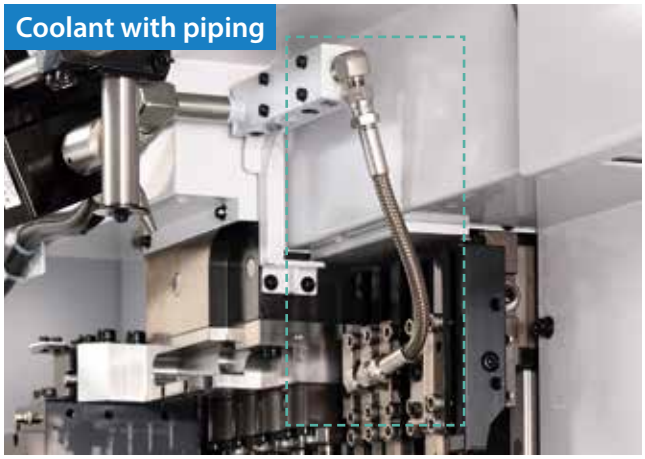

# 3 Large lineup for various tooling operations

## Turning Screw clamp - JCTM

Coolant supply structure comparison (Internal evaluation) (Image)

| Screw clamp- JCTM | Competitor A |
|---|---|
| Discharges coolant toward the rake surface of insert | Discharges coolant down onto the chip forcing the chip into the part |

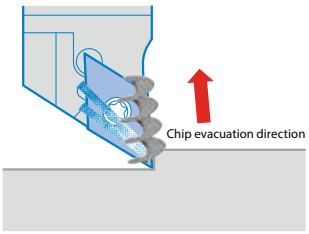


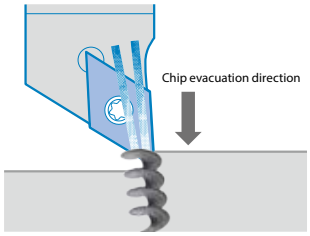


| | Screw clamp- JCTM | Competitor A |
|---|---|---|
| Chip control performance | ✓ Provides stable chip curls | Chip becomes unstable |
| Cooling effect | ✓ The cutting edge stays cool | Chip can prevent coolant supply to edges |

- **Double coolant holes**
  Provide coolant toward the rake face of the insert
  (V Type □12: Single hole)
- **Lineup**
  SCLC-JCTM / SDJC-JCTM
  SVJB-JCTM / SVJP-JCTM

## External grooving KGBF-JCTM

Coolant discharging comparison (Internal evaluation)

Small chips and better cooling of the insert leads to longer tool life.

○ Cutting edge
○ Coolant hole

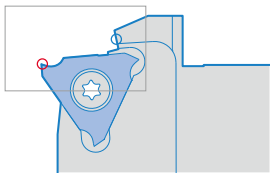

KGBF-JCTM

(Without insert)

Competitor B

(Without insert)

- **Provides coolant toward the rake surface of insert**
- **Specification**
  Edge width: 0.25 -3 mm
  Ground chipbreaker/3D GL chipbreaker
  Maximum groove depth: 3 mm

## Square shank identification system (small tools)

| Clamping system | |
|---|---|
| A | Back clamp |
| C | Top clamp |
| P | Lever lock |
| S | Screw clamp |

| Insert shape | |
|---|---|
| C | 80° Rhombic |
| D | 55° Rhombic |
| S | 90° Square |
| T | 60° Triangle |
| V | 35° Rhombic |

| Hand of tool | |
|---|---|
| R | Right-hand |
| L | Left-hand |
| N | Neutral |

| Shank height |
|---|
| Shank height (mm) |

| Shank width |
|---|
| Shank width (mm) |

| Manufacturer´s option |
|---|
| Optional mark or number |
| e.g. : FF = Without offset |

**S C L C R 12 12 JX – 09 FF**

| Cutting edge angle | | | |
|---|---|---|---|
| A | B | D | F |
| 90° | 75° | 45° | 90° |
| G | J | K | L |
| 90° | 93° | 75° | 95° |
| N | P | S | T |
| 63° | 117.5° | 45° | 60° |
| V | | | |
| 72.5° | | | |

| Insert relief angle | |
|---|---|
| B | 5° Positive |
| C | 7° Positive |
| N | 0° Negative |
| P | 11° Positive |

| Toolholder length | |
|---|---|
| F | 80 (85) |
| H | 100 |
| JX | 120 |
| K | 125 |
| M | 150 |

Insert size: T, C, D, V, S

- Some back turning toolholders are Kyocera's original products, therefore their descriptions are not accordant with international standards.

## External sleeve holder identification system

| Shank | |
|---|---|
| S | Steel |

| Toolholder length | |
|---|---|
| F | 80 (85) |
| G | 90 |
| H | 100 |
| K | 125 (120) |

| Clamping system | |
|---|---|
| S | Screw clamp |

| Insert shape | |
|---|---|
| C | 80° Rhombic |
| D | 55° Rhombic |
| V | 35° Rhombic |

| Hand of tool | |
|---|---|
| L | Left-hand |

**S 20 K – S C L C L 09**

Shank diameter

| Cutting edge angle | |
|---|---|
| L | 95° |
| U | 93° |

| Insert relief angle | |
|---|---|
| B | 5° Positive |
| C | 7° Positive |

Insert size: C, D, V

- Specification may change without any prior notice.
- Due to the installation size constrains on the machine, the toolholder length of some products may not match with the symbol.

E

Small tools

## TKF / TKFB

| | | | | | | | | | | | | | | | | | | |
|---|---|---|---|---|---|---|---|---|---|---|---|---|---|---|---|---|---|---|
| | | | | | | | | | | | | Carbon steel / Alloy steel | ◌ | ◌ | ● | | P |
| | | | | | | | | | | | | Stainless steel | ◌ | ● | ◌ | | M |
| | | | | | | | | | | | | Cast iron | | | | ● | K |
| | | | | | | | | | | | | Non-ferrous metals | | | | ● | N |
| Insert | | Description | | | No. of edges | Dimension (mm) | | | | | | | Angle (°) | | Carbide | | | Applicable toolholder ➡ E15, E16 |
| | | | | | | CW | CDX | S | D1 | RE | W1 | a | PSIR R/L | θ | PVD PR1225 | PVD PR1535 | PVD PR1725 | - KW10 | |
| | 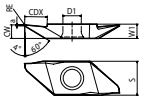 | TKFB | 12R15005M<br>12R28005M<br>12R28010M | | 2 | 1.5<br>2.8<br>2.8 | 2.6<br>4.6<br>4.6 | 8.7 | 5.2 | < 0.05<br>< 0.05<br>< 0.1 | 3 | 0.25<br>0.3<br>0.3 | - | - | ●<br>●<br>● | ●<br>●<br>● | ●<br>●<br>● | ●<br>●<br>● | KTKFR...-12<br>KTKFR...-12-Y |
| | | TKFB | 16R38005M<br>16R38010M | | 2 | 3.8 | 6.3 | 9.5 | 5.2 | < 0.05<br>< 0.1 | 4 | 0.3 | - | - | ●<br>● | ●<br>● | ●<br>● | ●<br>● | KTKFR...-16 |
| | 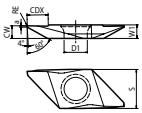 | TKFB | 12L28005MR<br>12L28010MR | | 2 | 2.8 | 4.6 | 8.7 | 5.2 | < 0.05<br>< 0.1 | 3 | 0.3 | - | - | ●<br>● | ●<br>● | | | KTKFL...-12 |
| | | TKFB | 16L38005MR<br>16L38010MR | | 2 | 3.8 | 6.3 | 9.5 | 5.2 | < 0.05<br>< 0.1 | 4 | 0.3 | - | - | ●<br>● | ●<br>● | | | KTKFL...-16 |
| | 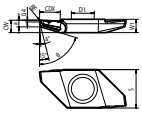 <br>Polished | TKFB | 12R28005P-GQ<br>12R28015P-GQ | | 2 | 2.8 | 4.6 | 8.7 | 5.2 | 0.05<br>0.15 | 3 | 1.5 | - | 74 | ●<br>● | ●<br>● | ●<br>● | | KTKFR...-12<br>KTKFR...-12-Y |
| | | TKFB | 16R38005P-GQ<br>16R38015P-GQ | | 2 | 3.8 | 6.3 | 9.5 | 5.2 | 0.05<br>0.15 | 4 | 1.8 | - | 72 | ●<br>● | ●<br>● | ●<br>● | | KTKFR...-16 |
| | 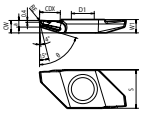 | TKFB | 12R28005-GQ<br>12R28015-GQ | | 2 | 2.8 | 4.6 | 8.7 | 5.2 | 0.05<br>0.15 | 3 | 1.5 | - | 74 | ●<br>● | ●<br>● | ●<br>● | | KTKFR...-12<br>KTKFR...-12-Y |
| | | TKFB | 16R38005-GQ<br>16R38015-GQ | | 2 | 3.8 | 6.3 | 9.5 | 5.2 | 0.05<br>0.15 | 4 | 1.8 | - | 72 | ●<br>● | ●<br>● | ●<br>● | | KTKFR...-16 |
| | 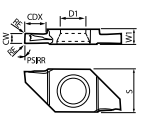 <br>Plunge and turn | TKF | 12R200-GTP | | 2 | 2 | 4.3 | 8.7 | 5 | 0.08 | 3 | - | 0 | - | | ● | ● | | KTKFR...-12<br>KTKFR...-12-Y |
| | | TKF | 16R300-GTP | | 2 | 3 | 5.8 | 9.5 | 5 | 0.08 | 4 | - | 0 | - | | ● | ● | | KTKFR...-16 |

Recommended cutting conditions ➡ E67

## Inserts identification system (Ref. to Tables 1 and 2)

**TKFB 12 R 15 005 M R**

- TKFB: Insert type
- 12: Insert size
- R: Insert hand (R : Right-hand; L : Left-hand)
- 15: Insert width
- 005: Corner-R(RE)
- M: Indicates the corner-R(RE) has a minus tolerance
- R: Hand of cutting lead angle (R : Right-hand)

**TKFB 12 R 28 005 P -GQ**

- TKFB: Insert type
- 12: Insert size
- R: Insert hand (R : Right-hand)
- 28: Insert width
- 005: Corner-R(RE)
- P: Polished
- -GQ: GQ chipbreaker

Table 1

| Small machining | General purpose | Large machining |
|---|---|---|
| 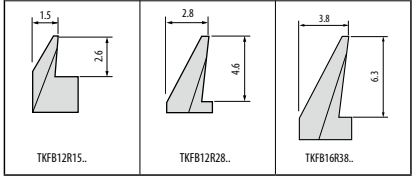 | | |
| TKFB12R15.. | TKFB12R28.. | TKFB16R38.. |

Table 2

| Toolholder | Right-hand | Toolholder | Left-hand |
|---|---|---|---|
| Insert | Right-hand | Insert | Left-hand |
| Lead angle | Right-hand | Lead angle | Right-hand |
| 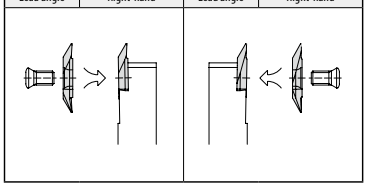 | | | |

## Applicable chipbreaker range

TKFB12R28...GQ

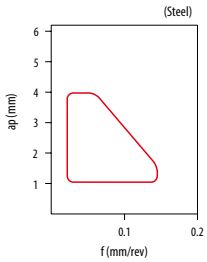


TKFB16R38...GQ

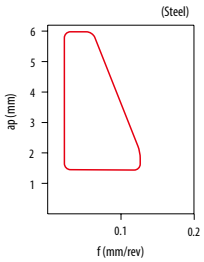


● : Standard item

## GTP chipbreaker - Grooving and Turning available

Cutting time comparison (Internal evaluation)

**Competitor A**

**Multiple grooves and a finishing pass**
**Workpiece material : S45C(ø25)**

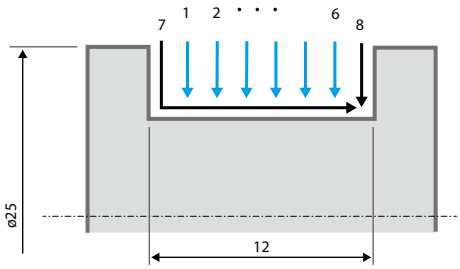


Cutting conditions: Multiple grooves
Vc=100m/min
ap=3.5mm, f=0.10mm/rev

Cutting conditions: Finishing
Vc=100m/min
ap=0.5mm, f=0.05mm/rev

**TKF12R200-GTP**

**Grooving and Turning**
**Workpiece material : S45C(ø25)**

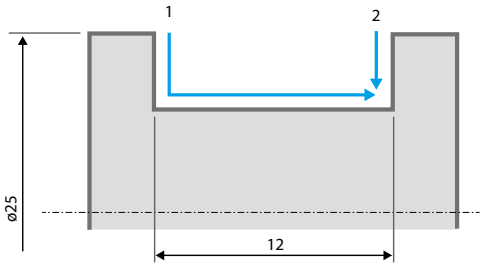


Cutting conditions: Grooving and Turning
Vc=100m/min
ap=4mm, f=0.05mm/rev

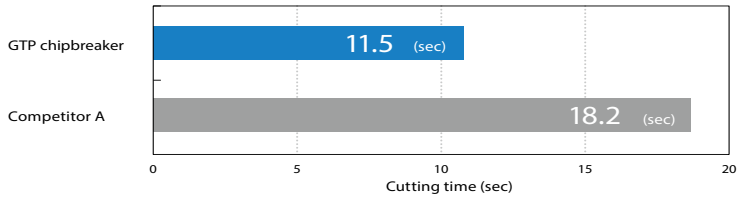


**GTP chipbreaker required fewer machining paths than competitor**

40%
Cutting time reduction

Chip control comparison (Internal evaluation)
Grooving

| f (mm/rev) | 0.05 | 0.07 | 0.10 |
|---|---|---|---|
| TKF12R 200-GTP | 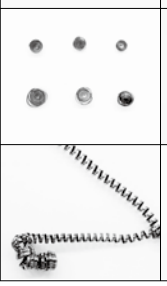 | 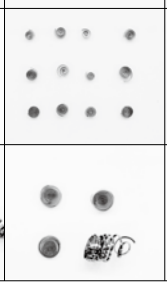 | 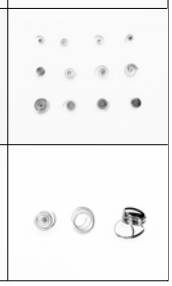 |
| Competitor B |  |  |  |

Cutting conditions : Vc=100m/min, ap=4mm, Wet
Workpiece material : S45C (ø25)

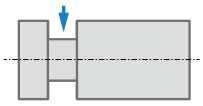

Recommended chipbreaker range (Steel)

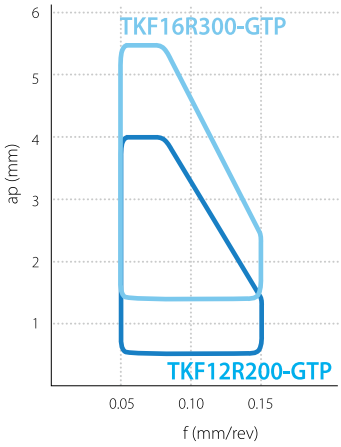


Recommended chipbreaker range (Stainless steel)

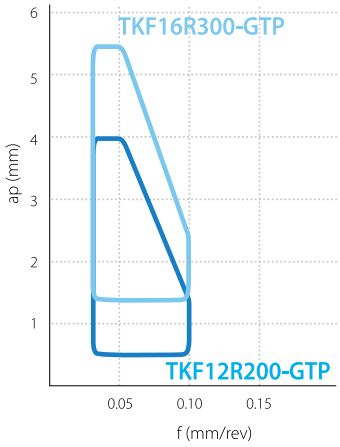


## Caution for machining

### Ramping

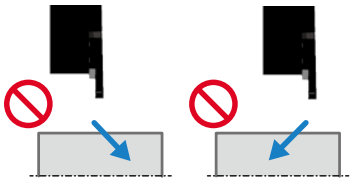

Ramping is not recommended if the workpiece is not pre-machined as shown in the right gures

### Back turning

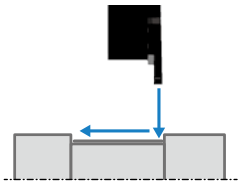

When back turning is used for nishing, make sure that the side cutting edge (back) of the tool is within 1mm

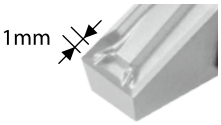


### Tips for ramping

Step grooving is required before ramping. (Refer to the gure below)

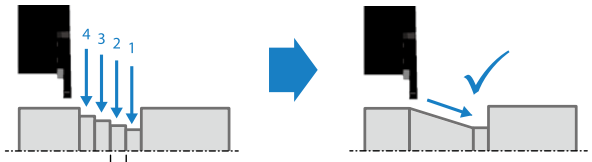


CW> *The width of the groove must be smaller than the edge width to overlap the previous groove

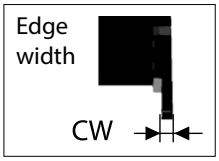


Back turning is not recommended on the tapered surface.

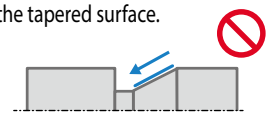

# TKF

| | |
|---|---|
| Carbon steel / Alloy steel | ● P |
| Stainless steel | ● M |
| Cast iron | ● K |
| Non-ferrous metals | ● N |

| Insert | Description | No. of edges | Dimension (mm) CW | CDX | S | S1 | D1 | RE | LE | W1 | Angle (°) PSIR R/L | Tolerance (mm) CW min. | CW max. | RE (+/-) min. | RE (+/-) max. | PCD - | PCD KPD001 | Applicable toolholder ➡ E15, E16 |
|---|---|---|---|---|---|---|---|---|---|---|---|---|---|---|---|---|---|---|
| 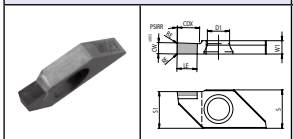 | TKF12R 150-NB<br>TKF12R 200-NB<br>TKF12R 250-NB | 1 | 1.5<br>2<br>2.5 | 3.5<br>4<br>4 | 8.7 | 8.3 | 5 | 0.1 | 2<br>3<br>3 | 3 | 0 | - 0.03 | + 0.03 | - 0.05 | 0 | ●<br>●<br>● | | KTKFR...-12<br>KTKFR...-12-Y |
| 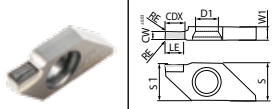 | TKF12R 200-AGT<br>TKF12R 250-AGT | 1 | 2<br>2.5 | 4.8 | 8.7 | 8.3 | 5 | 0.1 | 4.2 | 3 | 0 | - 0.03 | + 0.03 | - 0.05 | 0 | ●<br>● | | |
| 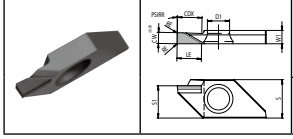 | TKF12R 200-AS<br>TKF12R 250-AS<br>TKF12L 200-AS | 1 | 2<br>2.5<br>2 | 5 | 8.7 | 7.3 | 5 | 0.1 | 5.3 | 3 | 0 | - 0.03 | + 0.03 | - 0.05 | 0 | ●<br>●<br>● | | KTKF R/L...-12<br>KTKFR...-12-Y |
| | TKF16R 250-AS<br>TKF16L 250-AS | 1 | 2.5 | 8 | 9.5 | 8 | 5 | 0.1 | 6.3 | 4 | 0 | - 0.03 | + 0.03 | - 0.05 | 0 | ●<br>● | | KTKF R/L...-16 |

Recommended cutting conditions ➡ E67

## Inserts identification system

| TKF | 12 | R | 200 | - | AGT |
|---|---|---|---|---|---|
| TKF | 12 | L | 200 | - | AS |

- Insert type: TKF
- Insert size: 12
- Insert hand: R : Right-hand / L : Left-hand
- Width (Edge width): 200
- Name of chipbreaker: AGT : AGT chipbreaker; AS : AS chipbreaker; GTP : GTP chipbreaker; NB : Without chipbreaker

## Applicable range

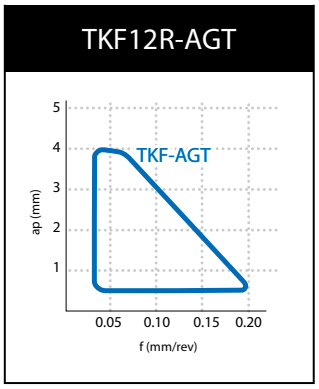


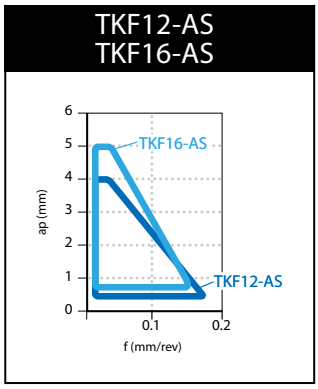


* PCD Inserts for turning and grooving

* Not recommended for cut-off

Note 1) The cutting edge of the TKF-AS / -ASR will be 1 mm lower than the center line when attached to the KTKF toolholder (Ref. to Fig. 2).
Adjust the height by making NC lathe parameter settings or inserting a plate.
2) If the 1 mm adjustment is not possible, use the TKF..-AGT/TKF..-NB. (Ref. to Fig. 3)

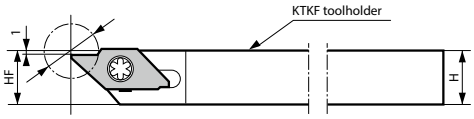


Fig. 2 When a TKF-AS / -ASR insert is attached(The cutting edge is 1mm lower than the center line)

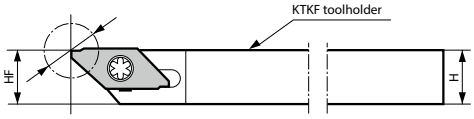


Fig. 3 When a TKF-NB insert is attached

● : Standard item

CBN & PCD Inserts are sold in 1 piece boxes

## KTKF (Back turning)

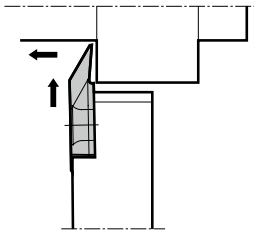

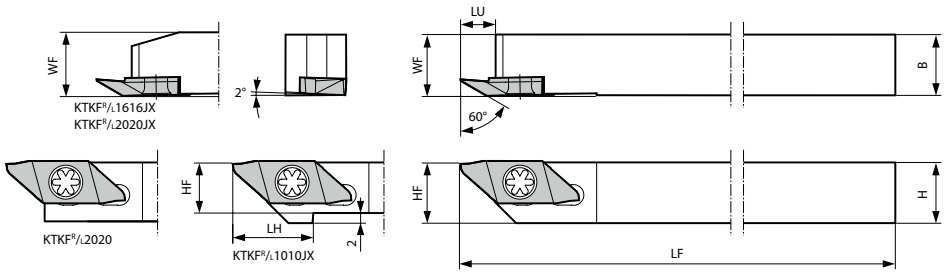


Fig. 1

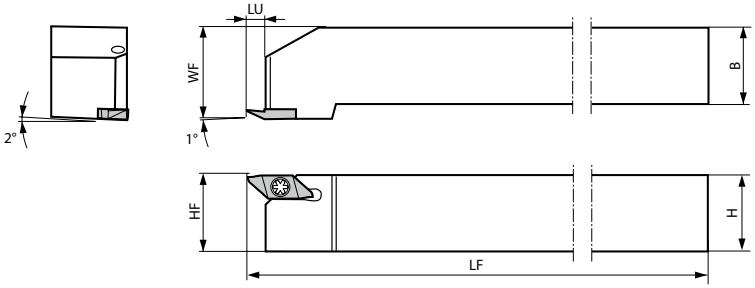


Fig. 2

Right-hand shown | Right-hand Insert for Right-hand Toolholder, Left-hand Insert for Left-hand Toolholder.

## Toolholder dimensions

| Description | | Availability R | Availability L | Dimension (mm) H | B | LH | HF | LF | LU | WF | Fig. | Spare parts: Screw | Spare parts: Wrench | Applicable inserts ➡ E12, E14 |
|---|---|---|---|---|---|---|---|---|---|---|---|---|---|---|
| KTKF R/L | 1010JX-12 | ● | ● | 10 | 10 | 15 | 10 | 120 | 6 | 10 | 1 | SB-4590TRWN | FT-10 | TKF12 R/L...<br>TKFB12 R/L... |
| | 1212F-12 | ● | ● | 12 | 12 | - | 12 | 85 | | 12 | 1 | | | |
| | 1212JX-12 | ● | ● | | | | | 120 | | | | | | |
| | 1616JX-12 | ● | ● | 16 | 16 | | 16 | 120 | | 16 | 1 | | | |
| | 2020JX-12 | ● | ● | 20 | 20 | | 20 | 120 | | 20 | 1 | | | |
| | 2525M-12 | ● | | 25 | 25 | | 25 | 150 | | 30 | 2 | | | |
| KTKF R/L | 1010JX-16 | ● | ● | 10 | 10 | 20 | 10 | 120 | 8 | 10 | 1 | SB-4590TRWN | FT-10 | TKF16 R/L...<br>TKFB16 R/L... |
| | 1212F-16 | ● | ● | 12 | 12 | - | 12 | 85 | | 12 | 1 | | | |
| | 1212JX-16 | ● | ● | | | | | 120 | | | | | | |
| | 1616JX-16 | ● | ● | 16 | 16 | | 16 | 120 | | 16 | 1 | | | |
| | 2020JX-16 | ● | ● | 20 | 20 | | 20 | 120 | | 20 | 1 | | | |
| | 2525M-16 | ● | | 25 | 25 | | 25 | 150 | | 30 | 2 | | | |

LU shows the distance from the toolholder to the cutting edge.
See Page **H15** for internal coolant type (coolant-through holders)

● : Standard item

E

Small tools

## KTKF (Back turning , Goose-neck holder)

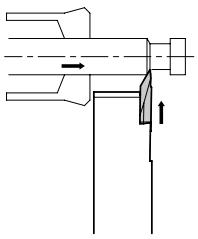

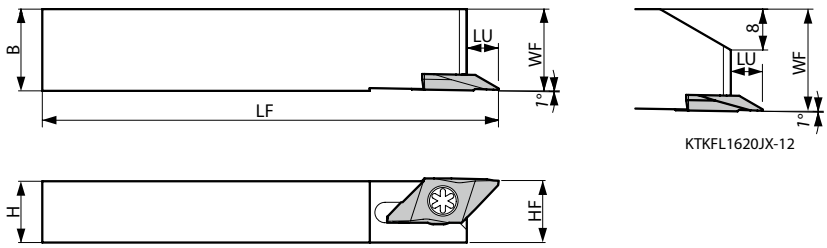


Left-hand shown | Left-hand Insert for Left-hand Toolholder.

### Toolholder dimensions

| Description | | Availability | Dimension (mm) | | | | | | | Spare parts | | Applicable inserts |
|---|---|---|---|---|---|---|---|---|---|---|---|---|
| | | | | | | | | | | Screw | Wrench | E12, E14 |
| | | L | H | B | HF | LF | LU | WF | | | | |
| KTKFL | 1216JX-12 | ● | 12 | 16 | 12 | 120 | 6 | 16 | | SB-4590TRWN | FT-10 | TKF12L... TKFB12L... |
| | 1620JX-12 | ● | 16 | 20 | 16 | | | 20 | | | | |

LU shows the distance from the toolholder to the cutting edge.

## KTKF-Y (Back turning , Y-axis toolholder)

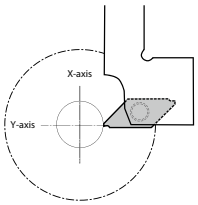


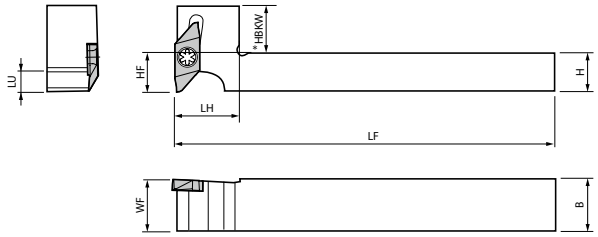


Right-hand shown | Right-hand Insert for Right-hand Toolholder.

### Toolholder dimensions

| Description | | Availability | Dimension (mm) | | | | | | | | Spare parts | | Applicable inserts |
|---|---|---|---|---|---|---|---|---|---|---|---|---|---|
| | | | | | | | | | | | Screw | Wrench | E12, E14 |
| | | R | H | B | LH | HF | HBKW | LF | LU | WF | | | |
| KTKFR | 1216JX-12-Y | ● | 12 | 16 | 20 | 12 | 15 | 120 | 6 | 16 | SB-4590TRWN | FT-10 | TKF12R... TKFB12R... |
| | 1616JX-12-Y | ● | 16 | | 25 | 16 | 11 | | | | | | |

LU shows the distance from the toolholder to the cutting edge.

● : Standard item

## Precautions for using Y-axis toolholder

Do not use Y-axis toolholders side by side to prevent interference. (Only two Y-axis holder can be used at the same time)

With interference

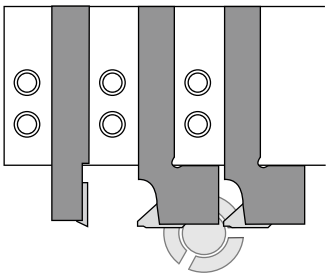

Without interference

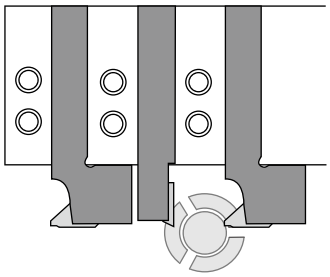

Standard toolholders may be mounted between two Y-axis toolholders

When changing the tool, set the retracted position with reference to the cutting edge of the Y-axis holder. (When exchanging from tool B to D)

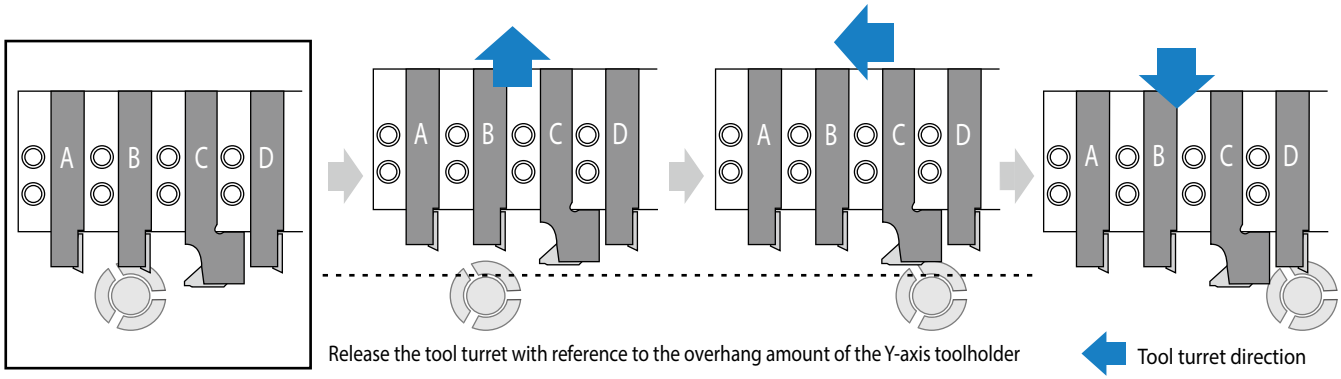


Note that using other toolholders together will result in dierent outside diameters

(Unit : mm)

| Y-axis toolholder overhang | Examples | Available outside cutting diameter (ø) \ Overhang amount L | 20 | 22 | 25 |
|---|---|---|---|---|---|
| 20 | 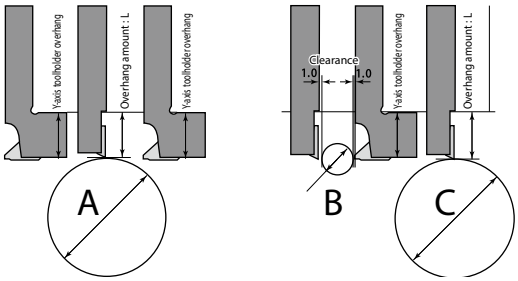  | A | Without restriction | Without restriction | Without restriction |
| | | B | 13.0 | 13.0 | 13.0 |
| | | C | Without restriction | Without restriction | Without restriction |
| 25 | 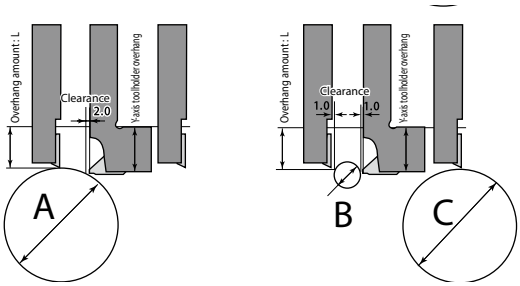  | A | 38.0 | 58.0 | Without restriction |
| | | B | 14.9 | 13.6 | 13.0 |
| | | C | 45.0 | 60.0 | Without restriction |

# Toolholders for back turning - TKFB insert

## How to select back turning toolholder hand

| | | |
|---|---|---|
| Right-hand | 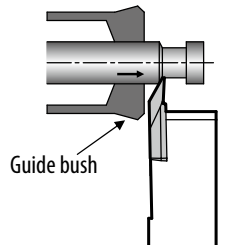 | • Machining near the guide bush is possible<br>• Narrow cutting edge width of TKFB12R15005M<br>• Optimum for small parts and high precision machining |
| Left-hand | The workpiece burr does not contact the guide bush.<br> 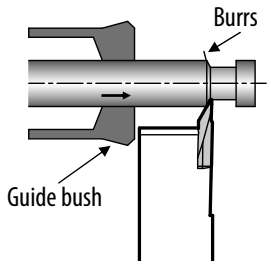 | • Machining with a distance from guide bush<br>• Good chip control due to large space between the guide bush and the tool.<br>• Excellent chip control in roughing and finishing (plural passes)<br>• Stable accuracy of external diameter dimension:<br>• When burrs occur, if a left-hand toolholder is used, it is not necessary to return workpiece into guide bush in finishing.<br>• Also, left-hand toolholders prevent guide bush wear caused by chip biting. |

## Workpiece movement and tool hand selection - in roughing and finishing

| | Roughing | Workpiece position after roughing | Finishing |
|---|---|---|---|
| Right-hand | 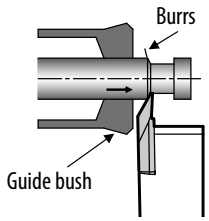 | 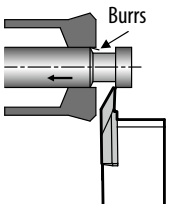 | 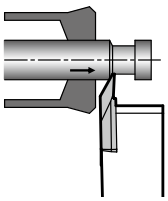 |
| Left-hand | 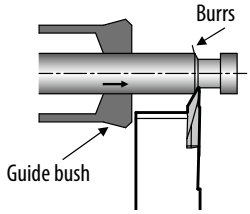 | 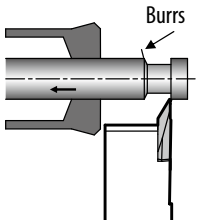 | 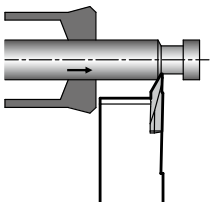 |

* Good dimension accuracy: If a left-hand toolholder is used, burrs on workpiece generated in roughing do not damage the guide bush in finishing.

## Chip control improvement in back turning

| | Chip control improvement by tool pass changes - 1 | Chip control improvement by tool pass changes - 2 |
|---|---|---|
| Roughing | Roughing with grooving tools<br>1. GMM2420-020MW (Grooving)<br> 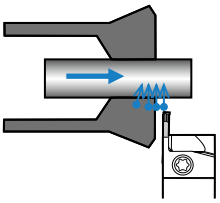 | Pre-Stage machining is processed with solid end mill<br>1. Solid end mill<br> 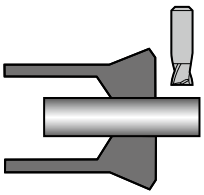 |
| Finishing<br>(Countermeasures 1)<br>Use right-hand toolholder | When using TKFB12R28010M (for back turning / right hand)<br> 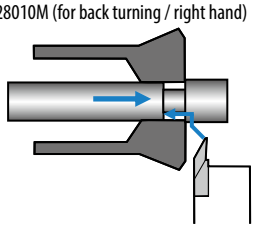 <br>Advantages:<br>• Good surface roughness<br>Disadvantages:<br>• If a machining pass is long, the guide bush can not support the workpiece. | When using TKFB12R28010M (for back turning / right hand)<br> 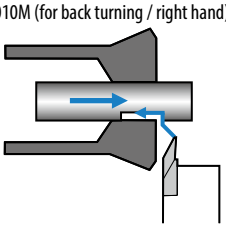 <br>Advantages:<br>1. Minimal deflection in long machining passes<br>2. Chips are broken into small pieces, though the workpiece material is sticky<br>Disadvantages:<br>• The pre-stage machining may cause fractures, because of interrupted machining |
| Finishing<br>(Countermeasures 2)<br>Use left-hand toolholder | When using TKFB12L28010M (for back turning / left hand)<br> 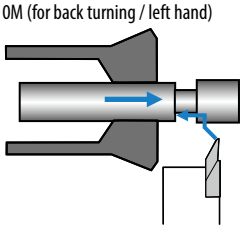 <br>Advantages:<br>1. Good surface roughness<br>2. High precision machining if the machined portion does not contact the guide bush.<br>Disadvantages:<br>• If a machining pass is long, the guide bush can not support the workpiece. | When using TKFB12L28010M (for back turning / left hand)<br> 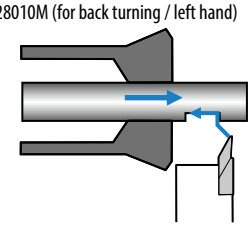 <br>Advantages:<br>1. Minimal deflection in long machining passes<br>2. Chips are broken into small pieces, though the workpiece material is sticky.<br>3. High precision machining if the machined portion does not contact the guide bush.<br>Disadvantages:<br>• The pre-stage machining may cause fractures, because of interrupted machining. |

## Countermeasure against peeled surface in face back turning

When peeled surface occurs on the workpiece face, please apply the countermeasures below.

**Countermeasures 1** Face finishing

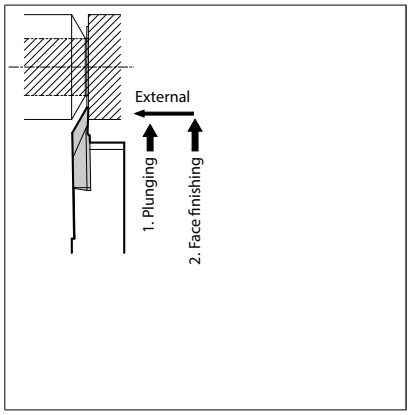


**Countermeasures 2** Face finishing after grooving

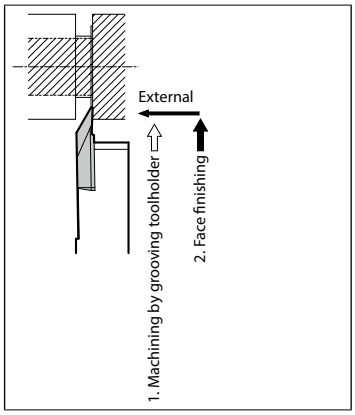

E

Small tools

## AABS-40F (Back turning / Edge width : 2.8mm, Max. depth : 4mm)

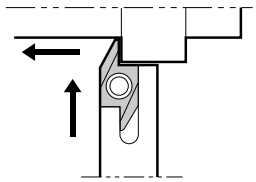

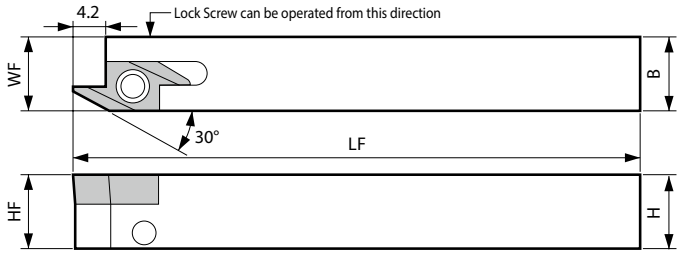


### Toolholder dimensions

| Description | | Availability | Dimension (mm) | | | | | Standard corner-R(RE) | Spare parts | | | Applicable inserts ➡ B112 |
|---|---|---|---|---|---|---|---|---|---|---|---|---|
| | | | | | | | | | Anchor pin | Lock screw | Wrench | |
| | | R | H | B | HF | LF | WF | | | | | |
| AABSR | 1010JX-40F | ● | 10 | 10 | 10 | | 10.2 | | LPA-11 | | | |
| | 1212JX-40F | ● | 12 | 12 | 12 | 120 | 12.2 | 0.15 | LPA-13 | HSB4X8R | FH-2 | ABS15R40... |
| | 1616JX-40F | ● | 16 | 16 | 16 | | 16.2 | | LPA-17 | | | |

## SABS-40F (Back turning / Edge width : 2.8mm, Max. depth : 4mm)

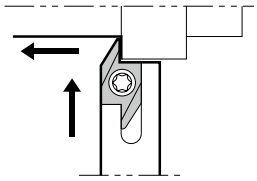

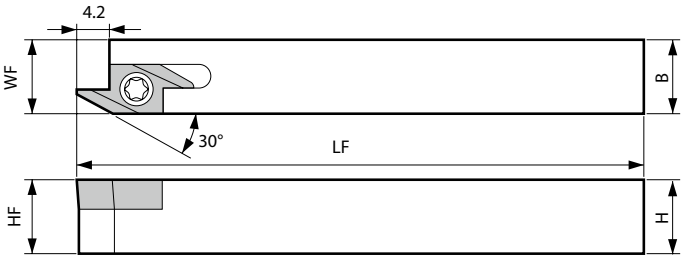


### Toolholder dimensions

| Description | | Availability | Dimension (mm) | | | | | Standard corner-R(RE) | Spare parts | | Applicable inserts ➡ B112 |
|---|---|---|---|---|---|---|---|---|---|---|---|
| | | | | | | | | | Screw | Wrench | |
| | | R | H | B | HF | LF | WF | | | | |
| SABSR | 1010JX-40F | ● | 10 | 10 | 10 | 120 | 10.2 | | | | |
| | 1212F-40F | ● | 12 | 12 | 12 | 85 | 12.2 | | | | |
| | 1212JX-40F | ● | | | | 120 | | 0.15 | SB-3080TR | FT-10 | ABS15R40... |
| | 1616JX-40F | ● | 16 | 16 | 16 | | 16.2 | | | | |
| | 2020K-40F | ● | 20 | 20 | 20 | 125 | 20.2 | | | | |

### Applicable inserts

| Applications | Back turning |
|---|---|
| Insert | |
| Type | ABS15 |
| Page | B112 |

● : Standard item

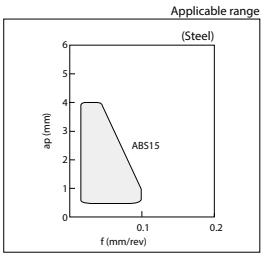


Recommended cutting conditions ➡ E67

## AABW-40F (Back turning / Edge width : 4.7mm, Max. depth : 4mm)

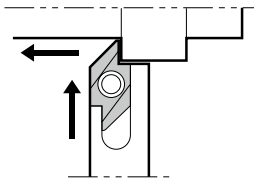

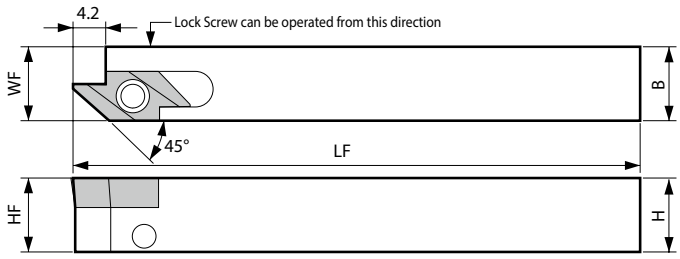


### Toolholder dimensions

| Description | | Availability | Dimension (mm) | | | | | Standard corner-R(RE) | Spare parts | | | Applicable inserts ➡ B112 |
|---|---|---|---|---|---|---|---|---|---|---|---|---|
| | | | | | | | | | Anchor pin | Lock screw | Wrench | |
| | | R | H | B | HF | LF | WF | | | 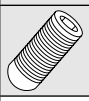 | | |
| AABWR | 1010JX-40F | ● | 10 | 10 | 10 | | 10.2 | | LPA-11 | | | |
| | 1212JX-40F | ● | 12 | 12 | 12 | 120 | 12.2 | 0.15 | LPA-13 | HSB4X8R | FH-2 | ABW15R40... |
| | 1616JX-40F | ● | 16 | 16 | 16 | | 16.2 | | LPA-17 | | | |

## SABW-40F (Back turning / Edge width : 4.7mm, Max. depth : 4mm)

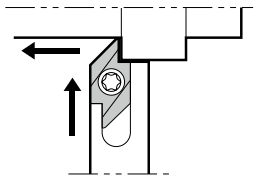

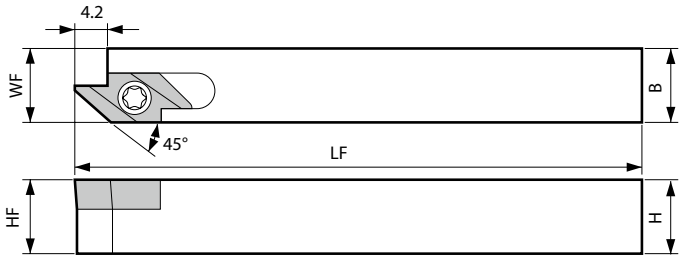


### Toolholder dimensions

| Description | | Availability | Dimension (mm) | | | | | Standard corner-R(RE) | Spare parts | | Applicable inserts ➡ B112 |
|---|---|---|---|---|---|---|---|---|---|---|---|
| | | | | | | | | | Screw | Wrench | |
| | | R | H | B | HF | LF | WF | | | | |
| SABWR | 1010JX-40F | ● | 10 | 10 | 10 | | 10.2 | | | | |
| | 1212JX-40F | ● | 12 | 12 | 12 | 120 | 12.2 | 0.15 | SB-3080TR | FT-10 | ABW15R40... |
| | 1616JX-40F | ● | 16 | 16 | 16 | | 16.2 | | | | |
| | 2020K-40F | ● | 20 | 20 | 20 | 125 | 20.2 | | | | |

### Applicable inserts

| Applications | Back turning |
|---|---|
| Insert | |
| Type | ABW15 |
| Page | B112 |

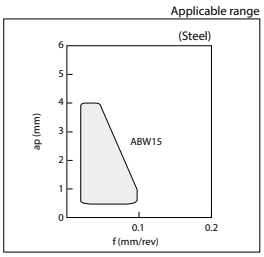


Recommended cutting conditions ➡ E67

● : Standard item

E

Small tools

## AABW-50F (Back turning / Edge width : 4.7mm, Max. depth : 5mm)

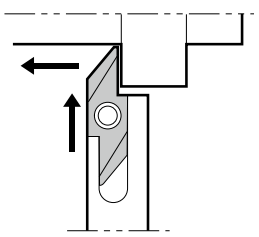

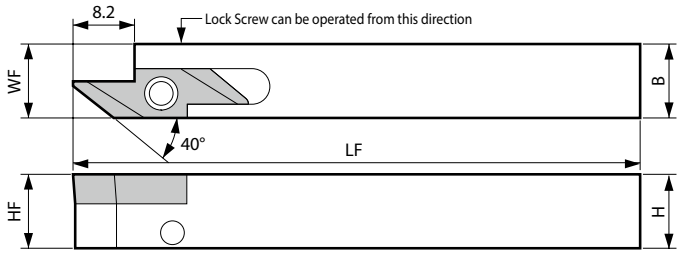


### Toolholder dimensions

| Description | | Availability | Dimension (mm) | | | | | Standard corner-R(RE) | Spare parts | | | Applicable inserts ➡ B112 |
|---|---|---|---|---|---|---|---|---|---|---|---|---|
| | | | | | | | | | Anchor pin | Lock screw | Wrench | |
| | | R | H | B | HF | LF | WF | | | | | |
| AABWR | 1010JX-50F | ● | 10 | 10 | 10 | 120 | 10.2 | 0.15 | LPA-11 | HSB4X8R | FH-2 | ABW23R50... |
| | 1212JX-50F | ● | 12 | 12 | 12 | | 12.2 | | LPA-13 | | | |
| | 1616JX-50F | ● | 16 | 16 | 16 | | 16.2 | | LPA-17 | | | |

## SABW-50F (Back turning / Edge width : 4.7mm, Max. depth : 5mm)

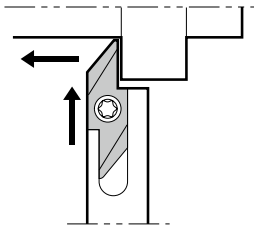

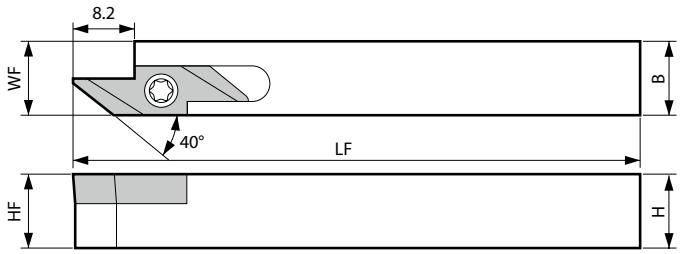


### Toolholder dimensions

| Description | | Availability | Dimension (mm) | | | | | Standard corner-R(RE) | Spare parts | | Applicable inserts ➡ B112 |
|---|---|---|---|---|---|---|---|---|---|---|---|
| | | | | | | | | | Screw | Wrench | |
| | | R | H | B | HF | LF | WF | | | | |
| SABWR | 1010JX-50F | ● | 10 | 10 | 10 | 120 | 10.2 | 0.15 | SB-3080TR | FT-10 | ABW23R50... |
| | 1212JX-50F | ● | 12 | 12 | 12 | | 12.2 | | | | |
| | 1616JX-50F | ● | 16 | 16 | 16 | | 16.2 | | | | |
| | 2020K-50F | ● | 20 | 20 | 20 | 125 | 20.2 | | | | |

### Applicable inserts

| Applications | Back turning |
|---|---|
| Insert | |
| Type | ABW23 |
| Page | B112 |

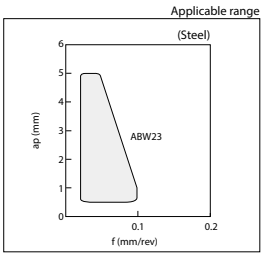


Recommended cutting conditions ➡ E67

● : Standard item

## SDJC (External turning / External copying)

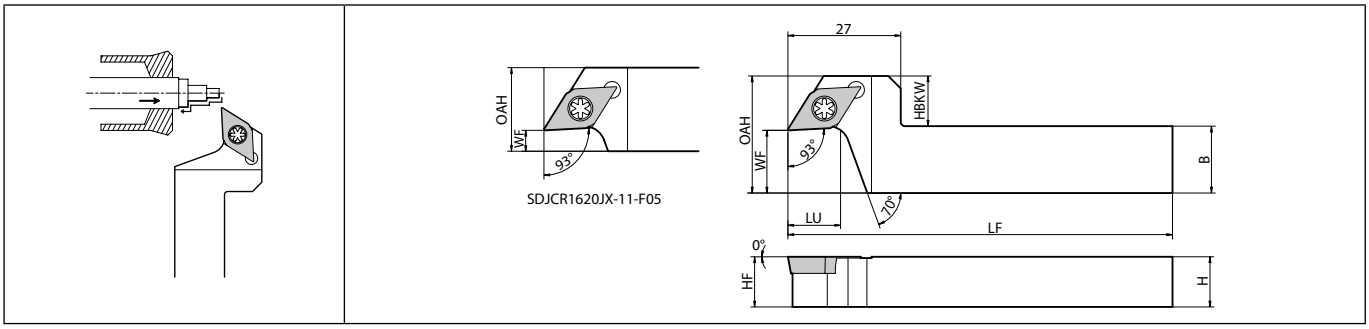


Right-hand shown

## Toolholder dimensions

| Description | | Availability | Dimension (mm) | | | | | | | | Standard corner-R(RE) | Spare parts | | Applicable inserts |
|---|---|---|---|---|---|---|---|---|---|---|---|---|---|---|
| | | | | | | | | | | | | Screw | Wrench | |
| | | R | H | B | OAH | HF | HBKW | LF | LU | WF | | | | |
| SDJCR | 1216JX-11-F05 | ● | 12 | 16 | 18 | 12 | 2 | 120 | 12.6 | 5 | 0.2 | SB-4085TR | FT-15 | DC□T11T3...<br>DC□W11T3...<br>DC□X11T3... |
| | 1216JX-11-F15 | ● | | | 28 | | 12 | | | 15 | | | | |
| | 1620JX-11-F05 | ● | 16 | 20 | 20 | 16 | - | | | 5 | | | | |
| | 1620JX-11-F15 | ● | | | 28 | | 8 | | | 15 | | | | |

For WP chipbreaker, cutting edge offsets or program corrections are required on **R36** and **R37**.

## Applicable inserts

| Applications | Minute ap | Finishing | Finishing | Finishing | Finishing | Finishing - Medium | Finishing | Finishing |
|---|---|---|---|---|---|---|---|---|
| Insert | | | | | | | | |
| Chipbreaker type | **CF** | **GF** | **SKS** | **SK** | **CK** | **GQ** | **WP** | **R/L-WP** |
| Page | **B68** | **B68** | **B68** | **B68** | **B68** | **B69** | **B69** | **B69** |
| Applications | Finishing | Finishing | Finishing - Medium | Finishing - Medium | Medium | Medium | Finishing | Finishing |
| Insert | | 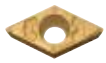 | 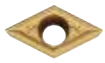 | | | | | |
| Chipbreaker type | **PP** | **GP** | **GK** | **HQ** | **STD** | **MF** | **R/L-F** | **R/L-FSF** |
| Page | **B69** | **B69** | **B70** | **B70** | **B70** | **B70** | **B72, B73** | **B72** |
| Applications | Low feed | Low feed | Low feed | Low feed | Low carbon steel | Low carbon steel | Stainless steel / Heat-resistant alloys | Cast iron |
| Insert | 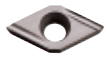 | 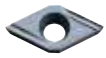 | | 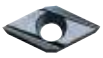 | | | | |
| Chipbreaker type | **R/L-U** | **R/L-USF** | **R/L-J** | **R/L-JSF** | **XP** | **XQ** | **MQ** | **No CB** |
| Page | **B74~B76** | **B74** | **B77** | **B76** | **B71** | **B71** | **B71** | **B78** |
| Applications | Non-ferrous metals | Non-ferrous metals | Non-ferrous metals | Non-ferrous metals | Non-ferrous metals | Hard materials | | |
| Insert | | | | | | | | |
| Chipbreaker type | **AP** | **R/L-A3** | **AH** | **PCD** | **APD** | **CBN** | | |
| Page | **B78** | **B78** | **B78** | **C42** | **C42** | **C22** | | |

Recommended cutting conditions ➡ **E65, E66**

● : Standard item

## SVLP (External turning / External copying)

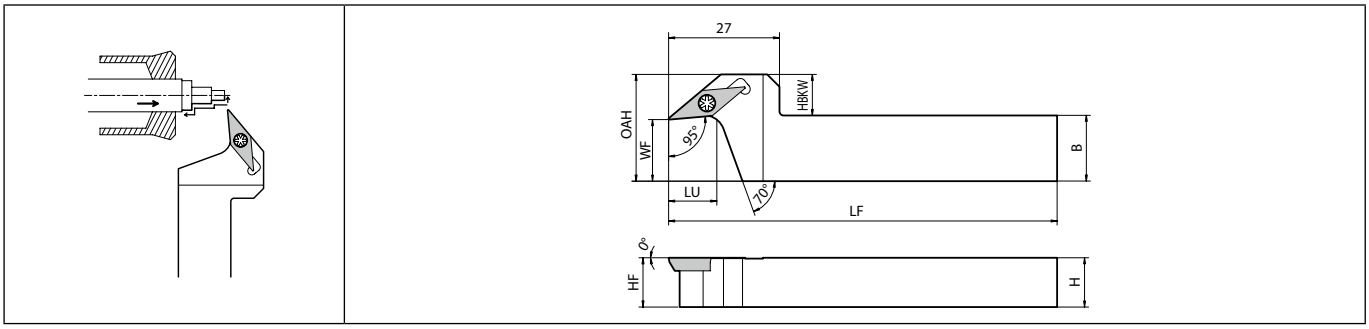


Right-hand shown

## Toolholder dimensions

| Description | | Availability | Dimension (mm) | | | | | | | | Standard corner-R(RE) | Spare parts | | Applicable inserts |
|---|---|---|---|---|---|---|---|---|---|---|---|---|---|---|
| | | | | | | | | | | | | Screw | Wrench | |
| | | R | H | B | OAH | HF | HBKW | LF | LU | WF | | | | |
| SVLPR | 1216JX-11-F15 | ● | 12 | 16 | 26 | 12 | 10 | 120 | 12 | 15 | 0.2 | SB-2570TR | FT-8 | VP□T1103... |
| | 1620JX-11-F15 | ● | 16 | 20 | | 16 | 6 | | | | | | | |

## Applicable inserts

| Applications | Minute ap | Finishing | Finishing | Finishing | Finishing | Finishing | Low feed | Low feed |
|---|---|---|---|---|---|---|---|---|
| Insert | | | | | | | | |
| Chipbreaker type | CF | GF | SKS | CK | R/L-F | R/L-FSF | R/L-U | R/L-USF |
| Page | B102 | B102 | B102 | B102 | B103 | B103 | B104 | B104 |

| Applications | Low feed |
|---|---|
| Insert | |
| Chipbreaker type | R/L-J |
| Page | B104 |

Recommended cutting conditions ➡ E65, E66

● : Standard item

## Goose-neck holder is available for multiple passes at roughing and finishing

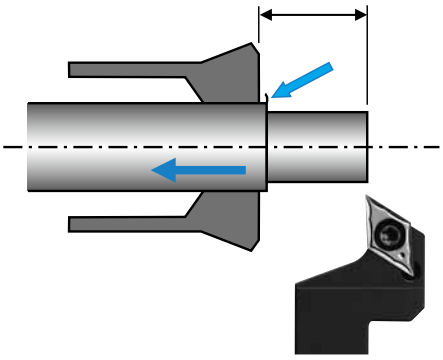

<Solution 1>
The workpiece burr does not contact the guide bush and no breakage will be caused.

<Solution 2>
Longitudinal dimension will be stable. External diameter will be stable owing to multiple pass machining (roughing and finishing).

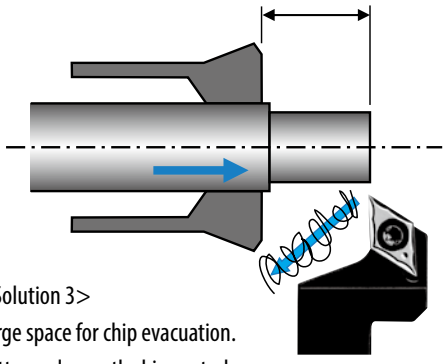

<Solution 3>
Large space for chip evacuation.
Better and smooth chip control.

## One toolholder for complex shape workpiece

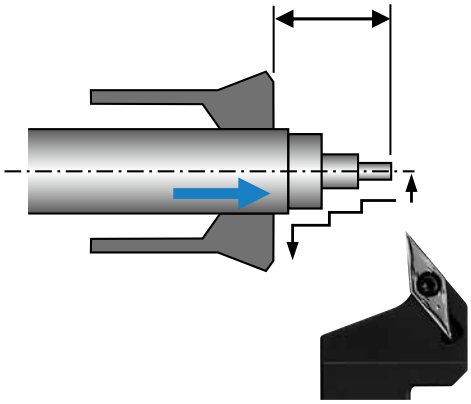

Complex shape workpiece can be processed with one toolholder.
It can be used for undercutting and external / face finishing.

## ACLC-FF (External turning / External facing , Back clamp, Without offset)

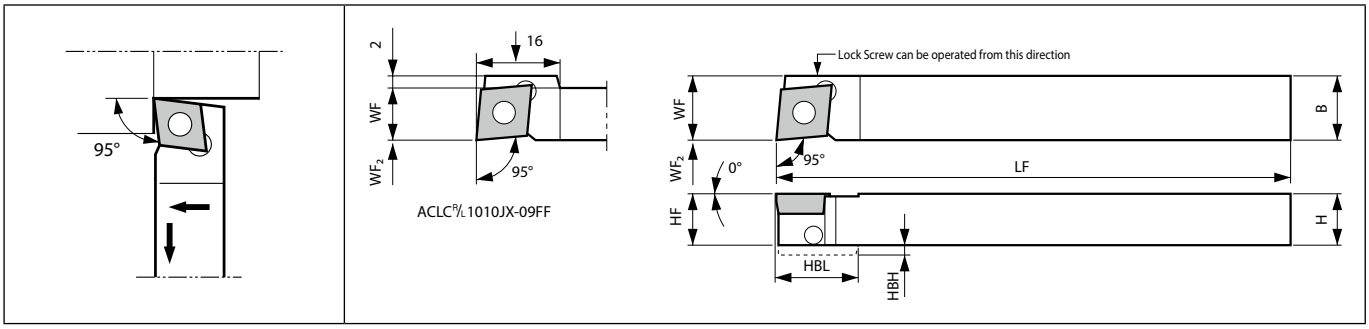


Right-hand shown

### Toolholder dimensions

| Description | | Availability R | Availability L | Dimension (mm) H | B | HF | HBH | HBL | LF | WF | WF2 | Standard corner-R(RE) | Spare parts: Anchor pin | Lock screw | Wrench | Applicable inserts |
|---|---|---|---|---|---|---|---|---|---|---|---|---|---|---|---|---|
| ACLCR/L | 1010JX-06FF | ● | ● | 10 | 10 | 10 | - | - | 120 | 10 | 0 | 0.2 | LPF-11 | HSB4X8R/L | FH-2 | CC□T0602...<br>CC□W0602... |
| ACLCR/L | 1010JX-09FF | ● | ● | 10 | 10 | 10 | 2 | 16 | 120 | 10 | 0 | 0.2 | LPF-13 | HSB4X8R/L | FH-2 | CC□T09T3...<br>CC□W09T3... |
| | 1212JX-09FF | ● | ● | 12 | 12 | 12 | - | - | | 12 | | | | | | |
| | 1616JX-09FF | ● | ● | 16 | 16 | 16 | | | | 16 | | | LPF-17 | | | |

Lock screw : HSB4X8R for Right-hand Toolholder, HSB4X8L for Left-hand Toolholder.

## SCLC-FF (External turning / External facing , Screw clamp, Without offset)

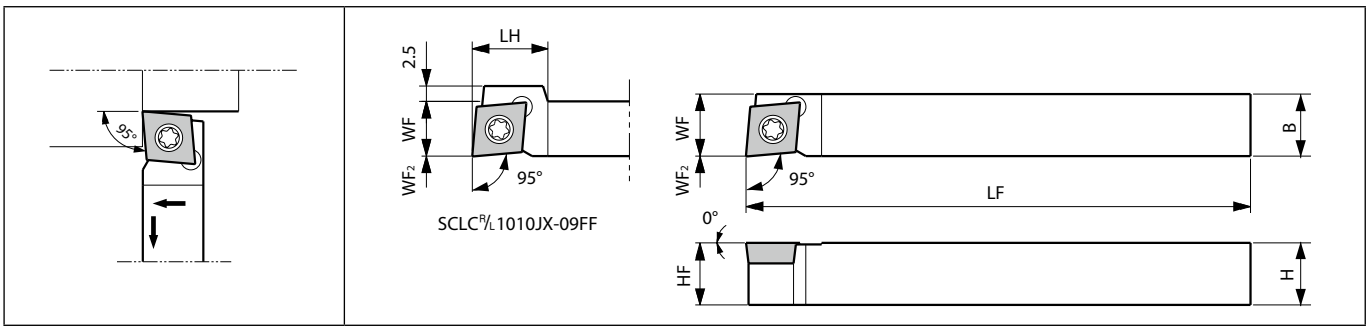


Right-hand shown

### Toolholder dimensions

| Description | | Availability R | Availability L | Dimension (mm) H | B | LH | HF | LF | WF | WF2 | Standard corner-R(RE) | Spare parts: Screw | Wrench | Wrench | Applicable inserts |
|---|---|---|---|---|---|---|---|---|---|---|---|---|---|---|---|
| SCLCR/L | 0808F-06FF | ● | ● | 8 | 8 | - | 8 | 85 | 8 | 0 | 0.2 | SB-2570TR | - | FT-8 | CC□T0602...<br>CC□W0602... |
| | 1010JX-06FF | ● | ● | 10 | 10 | | 10 | 120 | 10 | | | | | | |
| SCLCR/L | 1010JX-09FF | ● | ● | 10 | 10 | 15 | 10 | 120 | 10 | 0 | 0.2 | SB-4085TR | FT-15 | - | CC□T09T3...<br>CC□W09T3... |
| | 1212F-09FF | ● | ● | 12 | 12 | - | 12 | 85 | 12 | | | | | | |
| | 1212JX-09FF | ● | ● | | | | | 120 | | | | | | | |
| | 1616JX-09FF | ● | ● | 16 | 16 | | 16 | | 16 | | | | | | |
| | 2020JX-09FF | ● | ● | 20 | 20 | | 20 | | 20 | | | | | | |

● : Standard item

## SCLC-FFJCTM (External turning / External facing , Screw clamp, Without offset, Coolant-though holder)

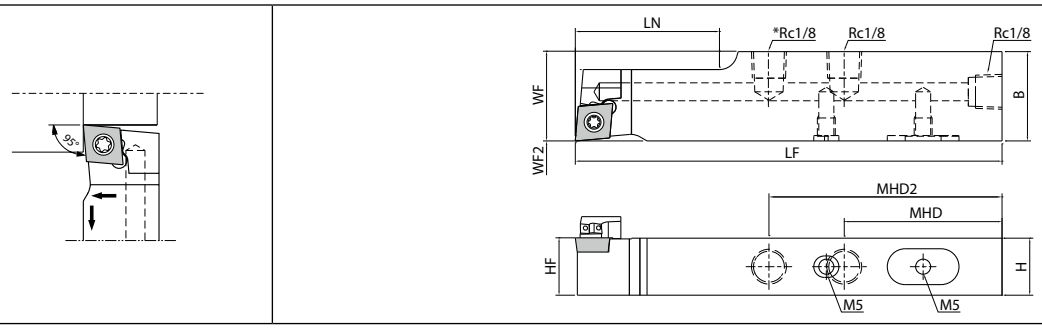


Right-hand shown | SCLCR12…: 2-Rc1/8

### Toolholder dimensions

| Description | | Availability | Dimension (mm) | | | | | | | | | Standard corner-R(RE) | Coolant hole | Spare parts | | | | Applicable inserts |
|---|---|---|---|---|---|---|---|---|---|---|---|---|---|---|---|---|---|---|
| | | | | | | | | | | | | | | Plug | Plug | Screw | Wrench | |
| | | R | H | B | MHD | MHD2 | HF | LF | LN | WF | $WF_2$ | | | 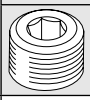 | | | | |
| SCLCR | 1218JX-09FFJCTM | ● | 12 | 18 | 54 | - | 12 | 120 | 28 | 18 | 0 | 0.2 | Yes | GP-1 | HS5X4LP | SB-4085TR | FT-15 | CC□T09T3...<br>CC□W09T3... |
| | 1625JX-09FFJCTM | ● | 16 | 25 | 44 | 65 | 16 | | 40 | 25 | | | | | | | | |
| | 2025JX-09FFJCTM | ● | 20 | | | | 20 | | | | | | | | - | | | |

Please see page **H16** and **H17** for piping parts of coolant-through holders.

● : Standard item

## SCLC (External turning / External facing , Screw clamp)

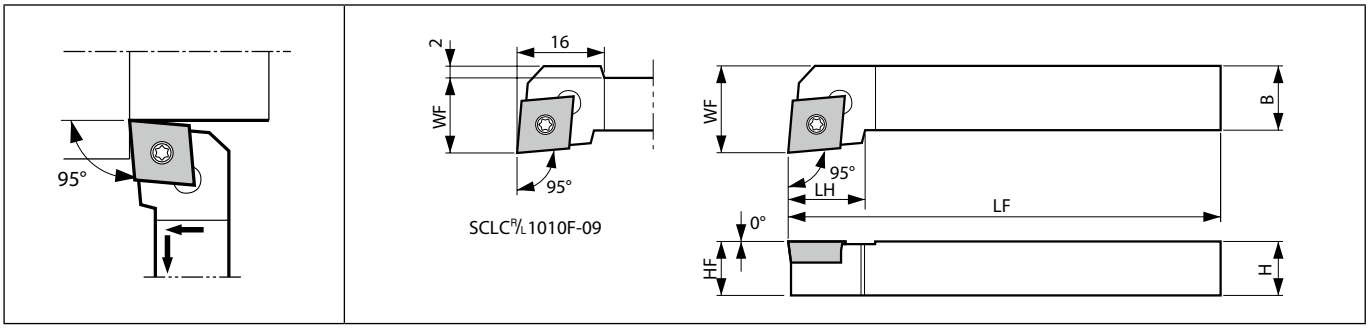


Right-hand shown

## Toolholder dimensions

| Description | | Availability R | Availability L | H | B | LH | HF | LF | WF | Standard corner-R(RE) | Screw | Wrench | Wrench | Wrench | Applicable inserts |
|---|---|---|---|---|---|---|---|---|---|---|---|---|---|---|---|
| | | | | Dimension (mm) | | | | | | | Spare parts | | | | |
| SCLCR/L | 1010F-06 | ● | ● | 10 | 10 | 9 | 10 | 80 | 12 | 0.2 | SB-2570TR | - | FT-8 | - | CC□T0602...<br>CC□W0602... |
| SCLCR/L | 1010F-09 | ● | ● | 10 | 10 | 14 | 10 | 80 | 14 | 0.2 | SB-4085TR | FT-15 | - | - | CC□T09T3...<br>CC□W09T3... |
| | 1212H-09 | ● | ● | 12 | 12 | | 12 | 100 | 16 | | | | | | |
| | 1616H-09 | ● | ● | 16 | 16 | 15 | 16 | | 20 | | | | | | |
| | 2020K-09 | ● | ● | 20 | 20 | 20 | 20 | 125 | 25 | | | | | | |
| | 2525M-09 | ● | ● | 25 | 25 | 22 | 25 | 150 | 32 | | | | | | |
| SCLCR/L | 1616H-12 | ● | ● | 16 | 16 | 20 | 16 | 100 | 20 | 0.4 | SB-5090TR | - | - | LTW-20 | CC□T1204... |
| | 2020K-12 | ● | ● | 20 | 20 | 22 | 20 | 125 | 25 | | | | | | |
| | 2525M-12 | ● | ● | 25 | 25 | | 25 | 150 | 32 | | | | | | |

## Applicable inserts (ACLC-FF / SCLC-FF / SCLC-FFJCTM / SCLC)

| Applications | Finishing | Finishing | Finishing | Finishing | Finishing | Finishing - Medium | Finishing | Finishing |
|---|---|---|---|---|---|---|---|---|
| Insert | | | | | | | | |
| Chipbreaker type | PF | GF | SKS | SK | CK | GQ | WP | PP |
| Page | B58 | B58 | B59 | B59 | B59 | B59 | B60 | B60 |
| Applications | Finishing - Medium | Finishing - Medium | Medium | Medium | Low feed | Low feed | Stainless steel / Heat-resistant alloys | Cast iron |
| Insert | | | | | | | | |
| Chipbreaker type | GK | HQ | STD | MF | R/L-U | R/L-J | MQ | No CB |
| Page | B60 | B60 | B60 | B61 | B63~B65 | B65 | B61 | B66 |
| Applications | Non-ferrous metals | Non-ferrous metals | Non-ferrous metals | Non-ferrous metals | Non-ferrous metals | Hard materials | | |
| Insert | | | | 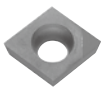 | | | | |
| Chipbreaker type | AP | R/L-A3 | AH | PCD | APD | CBN | | |
| Page | B66 | B66 | B66 | C39 | C40 | C20 | | |

Recommended cutting conditions ➡ E65, E66

● : Standard item

## ADJC-FF (External turning / External copying , Back clamp, Without offset)

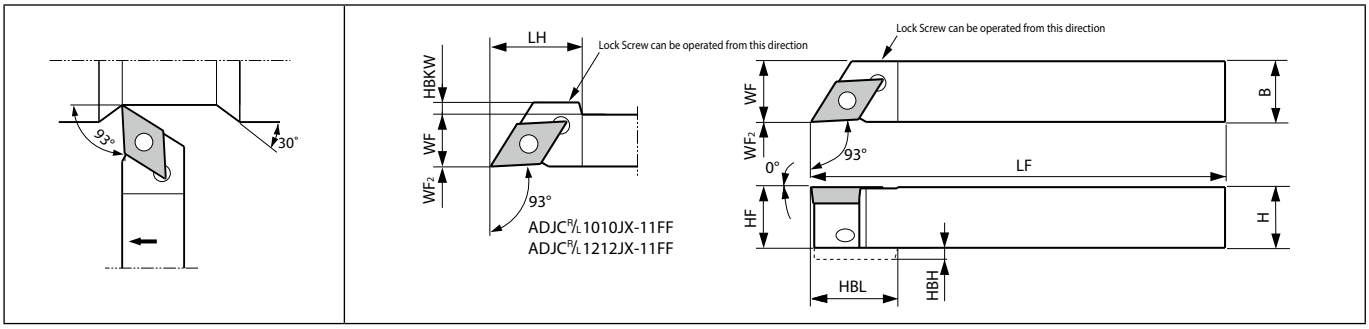


Right-hand shown

### Toolholder dimensions

| Description | | Availability R | Availability L | H | B | LH | HF | HBH | HBKW | HBL | LF | WF | WF2 | Standard corner-R(RE) | Spare parts: Anchor pin | Spare parts: Lock screw | Spare parts: Wrench | Applicable inserts |
|---|---|---|---|---|---|---|---|---|---|---|---|---|---|---|---|---|---|---|
| ADJCR/L | 1010JX-07FF | ● | ● | 10 | 10 | - | 10 | - | - | - | 120 | 10 | 0 | 0.2 | LPF-11 | HSB4X8R/L | FH-2 | DC□T0702...<br>DC□W0702...<br>DC□X0702... |
| ADJCR/L | 1010JX-11FF | ● | ● | 10 | 10 | 20 | 10 | 2 | 3 | 20 | 120 | 10 | 0 | 0.2 | LPF-13 | HSB4X8R/L | FH-2 | DC□T11T3...<br>DC□W11T3...<br>DC□X11T3... |
| | 1212JX-11FF | ● | ● | 12 | 12 | | 12 | - | 1 | - | | 12 | | | | | | |
| | 1616JX-11FF | ● | ● | 16 | 16 | - | 16 | | - | | | 16 | | | LPF-17 | | | |

Lock screw : HSB4X8R for Right-hand Toolholder, HSB4X8L for Left-hand Toolholder.
For WP chipbreaker, cutting edge offsets or program corrections are required on **R36** and **R37**.

## SDJC-FF (External turning / External copying, Screw clamp, Without offset)

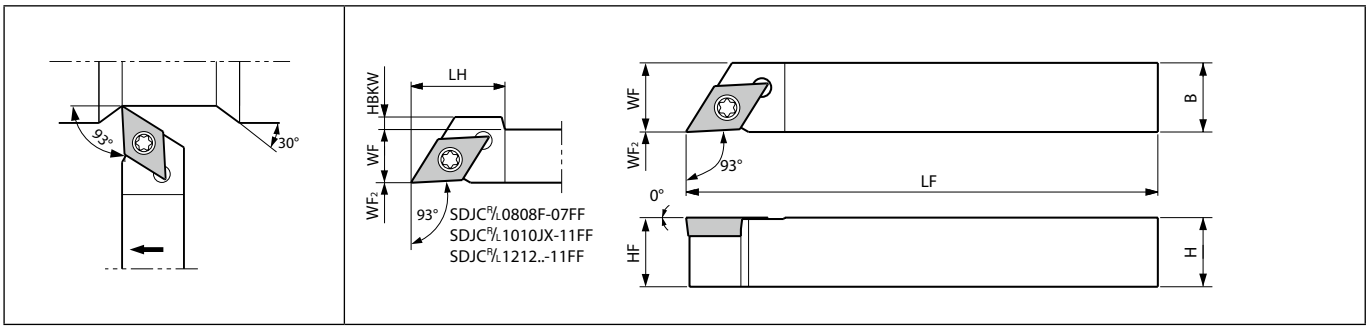


Right-hand shown

### Toolholder dimensions

| Description | | Availability R | Availability L | H | B | LH | HF | HBKW | LF | WF | WF2 | Standard corner-R(RE) | Spare parts: Screw | Spare parts: Wrench | Spare parts: Wrench | Applicable inserts |
|---|---|---|---|---|---|---|---|---|---|---|---|---|---|---|---|---|
| SDJCR/L | 0808F-07FF | ● | ● | 8 | 8 | 14 | 8 | 0.5 | 85 | 8 | 0 | 0.2 | SB-2570TR | - | FT-8 | DC□T0702...<br>DC□W0702...<br>DC□X0702... |
| | 1010JX-07FF | ● | ● | 10 | 10 | - | 10 | - | 120 | 10 | | | | | | |
| SDJCR/L | 1010JX-11FF | ● | ● | 10 | 10 | 20 | 10 | 3 | 120 | 10 | 0 | 0.2 | SB-4085TR | FT-15 | - | DC□T11T3...<br>DC□W11T3...<br>DC□X11T3... |
| | 1212F-11FF | ● | ● | 12 | 12 | | 12 | 1 | 85 | 12 | | | | | | |
| | 1212JX-11FF | ● | ● | | | | | | 120 | | | | | | | |
| | 1616JX-11FF | ● | ● | 16 | 16 | - | 16 | - | | 16 | | | | | | |
| | 2020JX-11FF | ● | ● | 20 | 20 | | 20 | | | 20 | | | | | | |

For WP chipbreaker, cutting edge offsets or program corrections are required on **R36** and **R37**.

● : Standard item

## SDJC-FFJCTM (External turning / External copying, Screw clamp, Without offset, Coolant-though holder)

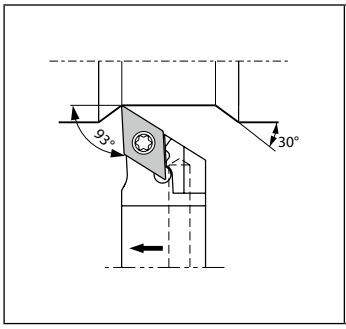


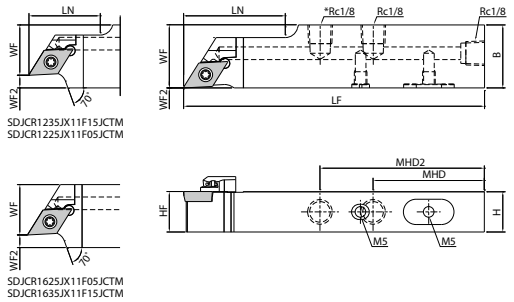


Right-hand shown | SDJCR12… :2-Rc1/8

## Toolholder dimensions

| Description | | Availability | Dimension (mm) | | | | | | | | | Standard corner-R(RE) | Coolant hole | Spare parts | | | | Applicable inserts |
|---|---|---|---|---|---|---|---|---|---|---|---|---|---|---|---|---|---|---|
| | | | R | H | B | MHD | MHD2 | HF | LF | LN | WF | $WF_2$ | | | Plug | Plug | Screw | Wrench | |
| SDJCR | 1218JX-11FFJCTM | ● | 12 | 18 | 54 | - | 12 | 120 | 28 | 18 | 0 | 0.2 | Yes | GP-1 | HS5X4LP | SB-4085TR | FT-15 | DC□T11T3... DC□W11T3... DC□X11T3... |
| | 1625JX-11FFJCTM | ● | 16 | 25 | 44 | 65 | 16 | | 40 | 25 | | | | | | | | |
| | 2025JX-11FFJCTM | ● | 20 | | | | 20 | | | | | | | | - | | | |
| SDJCR | 1225JX11F05JCTM | ● | 12 | 25 | 54 | - | 12 | 120 | 28 | 20 | 5 | 0.2 | Yes | GP-1 | HS5X4LP | SB-4085TR | FT-15 | DC□T11T3... DC□W11T3... DC□X11T3... |
| | 1235JX11F15JCTM | ● | | 35 | | | | | | | 15 | | | | | | | |
| | 1625JX11F05JCTM | ● | 16 | 25 | 44 | 65 | 16 | | - | | 5 | | | | | | | |
| | 1635JX11F15JCTM | ● | | 35 | | | | | | | 15 | | | | | | | |

Please see page **H16** and **H17** for piping parts of coolant-through holders.
For WP chipbreaker, cutting edge offsets or program corrections are required on **R36** and **R37**.

● : Standard item

## SDJC (External turning / External copying , Screw clamp)

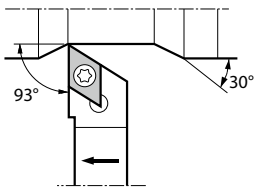


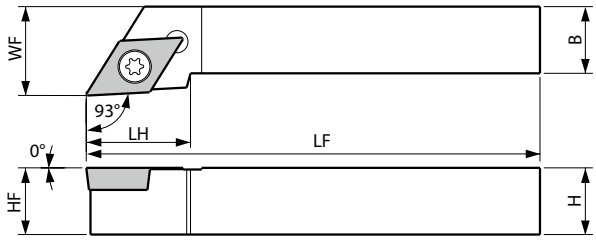


Right-hand shown

## Toolholder dimensions

| Description | | Availability R | Availability L | Dimension (mm) H | B | LH | HF | LF | WF | Standard corner-R(RE) | Spare parts: Screw | Spare parts: Wrench | Spare parts: Wrench | Applicable inserts |
|---|---|---|---|---|---|---|---|---|---|---|---|---|---|---|
| SDJC R/L | 1010F-07 | ● | ● | 10 | 10 | 12 | 10 | 80 | 12 | 0.2 | SB-2570TR | - | FT-8 | DC□T0702...<br>DC□W0702...<br>DC□X0702... |
| SDJC R/L | 1010F-11 | ● | ● | 10 | 10 | 18 | 10 | 80 | 12 | 0.2 | SB-4085TR | FT-15 | - | DC□T11T3...<br>DC□W11T3...<br>DC□X11T3... |
| | 1212H-11 | ● | ● | 12 | 12 | | 12 | 100 | 16 | | | | | |
| | 1616H-11 | ● | ● | 16 | 16 | | 16 | | 20 | | | | | |
| | 2020K-11 | ● | ● | 20 | 20 | | 20 | 125 | 25 | | | | | |
| | 2525M-11 | ● | ● | 25 | 25 | 23 | 25 | 150 | 32 | | | | | |

For WP chipbreaker, cutting edge offsets or program corrections are required on **R36** and **R37**.

● : Standard item

## SDJC-FF-Y (External turning / External copying , Y-axis toolholder)

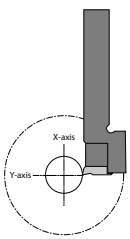


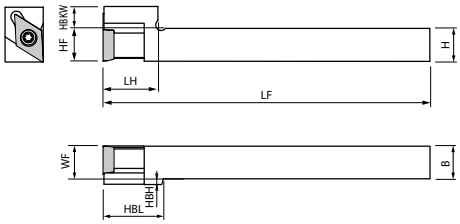


Fig. 1

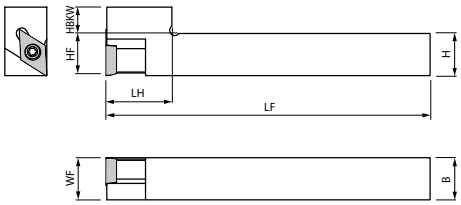


Fig. 2

Right-hand shown | Right-hand Insert for Right-hand Toolholder.

E

Small tools

## Toolholder dimensions

| Description | | Availability | Dimension (mm) | | | | | | | | | Fig. | Coolant hole | Spare parts | | Applicable inserts |
|---|---|---|---|---|---|---|---|---|---|---|---|---|---|---|---|---|
| | | | | | | | | | | | | | | Screw | Wrench | |
| | | R | H | B | LH | HF | HBH | HBKW | HBL | LF | WF | | | | | |
| SDJCR | 1212JX-11FF-Y | ● | 12 | 12 | 20 | 12 | 2 | 8 | 22 | 120 | 12 | 1 | No | SB-4085TR | FT-15 | DC□T11T3...<br>DC□W11T3...<br>DC□X11T3... |
| | 1616JX-11FF-Y | ● | 16 | 16 | 25 | 16 | - | 10 | - | | 16 | 2 | | | | |

For WP chipbreaker, cutting edge offsets or program corrections are required on **R36** and **R37**.

## Applicable inserts (ADJC-FF / SDJC-FF / SDJC-FFJCTM / SDJC / SDJC-FF-Y)

| **Applications** | Minute ap | Finishing | Finishing | Finishing | Finishing | Finishing - Medium | Finishing | Finishing |
|---|---|---|---|---|---|---|---|---|
| **Insert** | | | | | | | | |
| **Chipbreaker type** | **CF** | **GF** | **SKS** | **SK** | **CK** | **GQ** | **WP** | **R/L-WP** |
| **Page** | **B68** | **B68** | **B68** | **B68** | **B68** | **B69** | **B69** | **B69** |
| **Applications** | Finishing | Finishing | Finishing - Medium | Finishing - Medium | Medium | Medium | Finishing | Finishing |
| **Insert** | | | 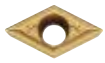 | | | | 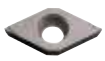 | 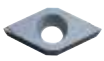 |
| **Chipbreaker type** | **PP** | **GP** | **GK** | **HQ** | **STD** | **MF** | **R/L-F** | **R/L-FSF** |
| **Page** | **B69** | **B69** | **B70** | **B70** | **B70** | **B70** | **B72, B73** | **B72** |
| **Applications** | Low feed | Low feed | Low feed | Low feed | Low carbon steel | Low carbon steel | Stainless steel / Heat-resistant alloys | Cast iron |
| **Insert** | | | | 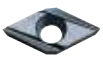 | | | | |
| **Chipbreaker type** | **R/L-U** | **R/L-USF** | **R/L-J** | **R/L-JSF** | **XP** | **XQ** | **MQ** | **No CB** |
| **Page** | **B74~B76** | **B74** | **B77** | **B76** | **B71** | **B71** | **B71** | **B78** |
| **Applications** | Non-ferrous metals | Non-ferrous metals | Non-ferrous metals | Non-ferrous metals | Non-ferrous metals | Hard materials | | |
| **Insert** | | | | | | | | |
| **Chipbreaker type** | **AP** | **R/L-A3** | **AH** | **PCD** | **APD** | **CBN** | | |
| **Page** | **B78** | **B78** | **B78** | **C42** | **C42** | **C22** | | |

Recommended cutting conditions ➡ **E65, E66**

● : Standard item

## Precautions for using Y-axis toolholder

Do not use Y-axis toolholders side by side to prevent interference. ( Only two Y-axis holder can be used at the same time )

With interference

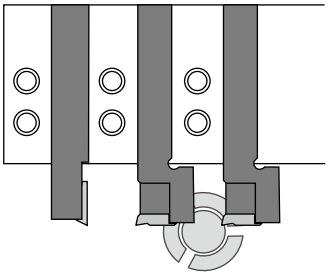

Without interference

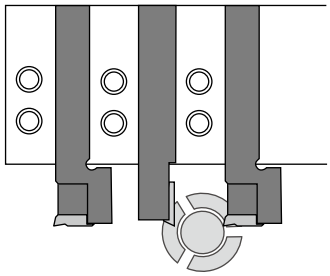

Standard toolholders may be mounted between two Y-axis toolholders

When changing the tool, set the retracted position with reference to the cutting edge of the Y-axis holder. (When exchanging from tool B to D)

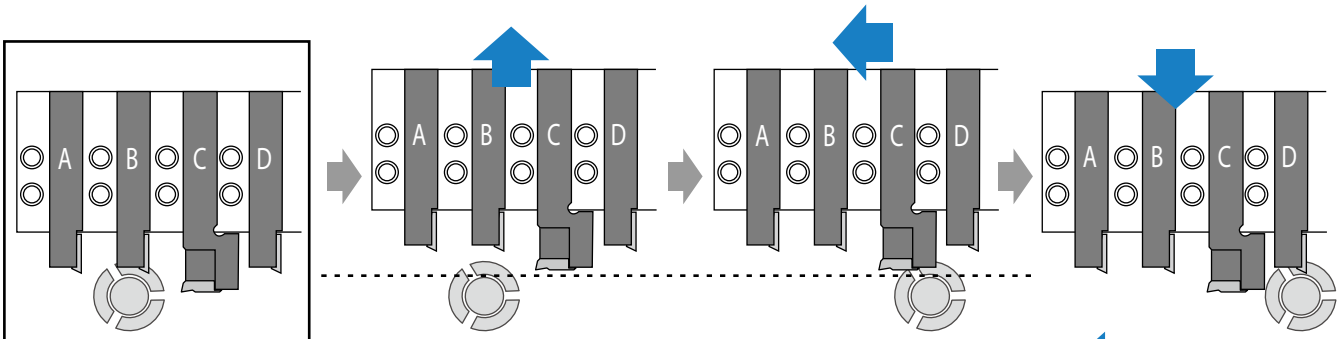


Release the tool turret with reference to the overhang amount of the Y-axis toolholder

Tool turret direction

### Note that using other toolholders together will result in dierent outside diameters

(Unit : mm)

| Y-axis toolholder overhang | Examples | Overhang amount L / Available outside cutting diameter (φ) | 20 | 22 | 25 |
|---|---|---|---|---|---|
| 20 | 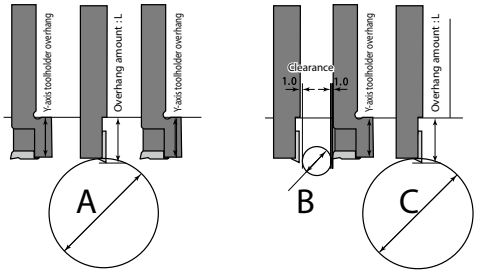  | A | Without restriction | Without restriction | Without restriction |
| | | B | 13.0 | 13.0 | 13.0 |
| | | C | Without restriction | Without restriction | Without restriction |
| 25 | 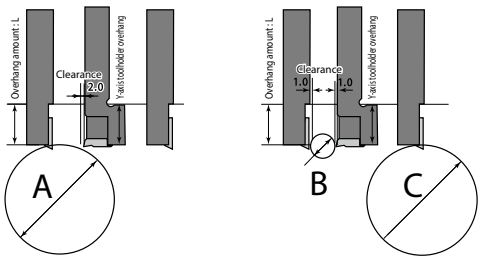  | A | 38.0 | 58.0 | Without restriction |
| | | B | 14.9 | 13.6 | 13.0 |
| | | C | 45.0 | 60.0 | Without restriction |

E

Small tools

## SDLC-FF (External turning / External copying, Screw clamp, Without offset)

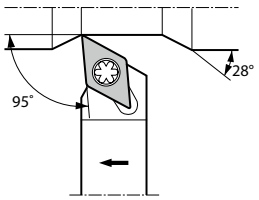


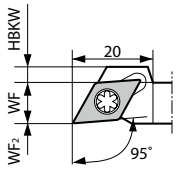


SDLC R/L 1010..-11FF
SDLC R/L 1212..-11FF

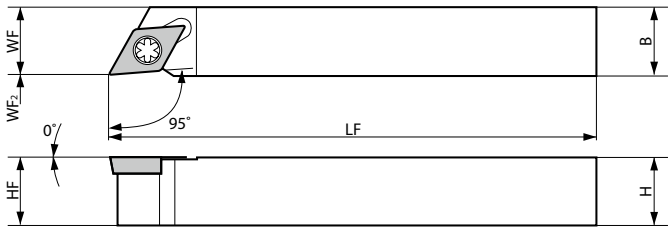


Right-hand shown

### Toolholder dimensions

| Description | | Availability R | Availability L | Dimension (mm) H | B | HF | HBKW | LF | WF | WF2 | Standard corner-R(RE) | Spare parts: Screw | Wrench | Wrench | Applicable inserts |
|---|---|---|---|---|---|---|---|---|---|---|---|---|---|---|---|
| SDLC R/L | 1010JX-07FF | ● | ● | 10 | 10 | 10 | - | 120 | 10 | 0 | 0.2 | SB-2570TR | - | FT-8 | DC□T0702... DC□W0702... |
| | 1212F-07FF | ● | ● | 12 | 12 | 12 | | 85 | 12 | | | | | | |
| | 1212JX-07FF | ● | ● | | | | | 120 | | | | | | | |
| | 1616JX-07FF | ● | ● | 16 | 16 | 16 | | | 16 | | | | | | |
| SDLC R/L | 1010F-11FF | ● | | 10 | 10 | 10 | 4 | 80 | 10 | 0 | 0.2 | SB-4085TR | FT-15 | - | DC□T11T3... DC□W11T3... |
| | 1010JX-11FF | ● | ● | | | | | 120 | | | | | | | |
| | 1212F-11FF | ● | | 12 | 12 | 12 | 2 | 85 | 12 | | | | | | |
| | 1212JX-11FF | ● | ● | | | | | 120 | | | | | | | |
| | 1616H-11FF | ● | | 16 | 16 | 16 | - | 100 | 16 | | | | | | |
| | 1616JX-11FF | ● | ● | | | | | 120 | | | | | | | |

## SDXC (External turning / External facing / External copying)

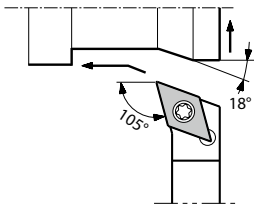


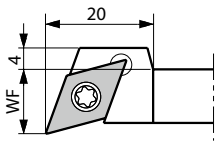


SDXC R/L 1010JX-11

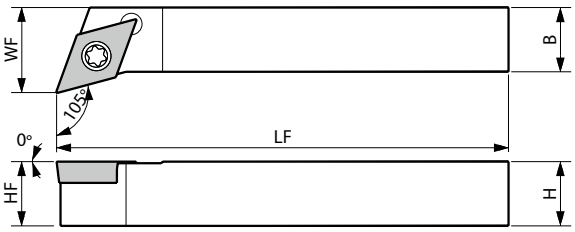


Right-hand shown

### Toolholder dimensions

| Description | | Availability R | Availability L | Dimension (mm) H | B | HF | LF | WF | Standard corner-R(RE) | Spare parts: Screw | Wrench | Wrench | Applicable inserts |
|---|---|---|---|---|---|---|---|---|---|---|---|---|---|
| SDXC R/L | 1010JX-07 | ● | ● | 10 | 10 | 10 | 120 | 12 | 0.2 | SB-2570TR | - | FT-8 | DC□T0702... DC□W0702... |
| SDXC R/L | 1010JX-11 | ● | ● | 10 | 10 | 10 | 120 | 12 | 0.2 | SB-4085TR | FT-15 | - | DC□T11T3... DC□W11T3... |
| | 1212JX-11 | ● | ● | 12 | 12 | 12 | | 16 | | | | | |
| | 1616JX-11 | ● | ● | 16 | 16 | 16 | | 20 | | | | | |

● : Standard item

## SDNC-F (External turning / External copying)

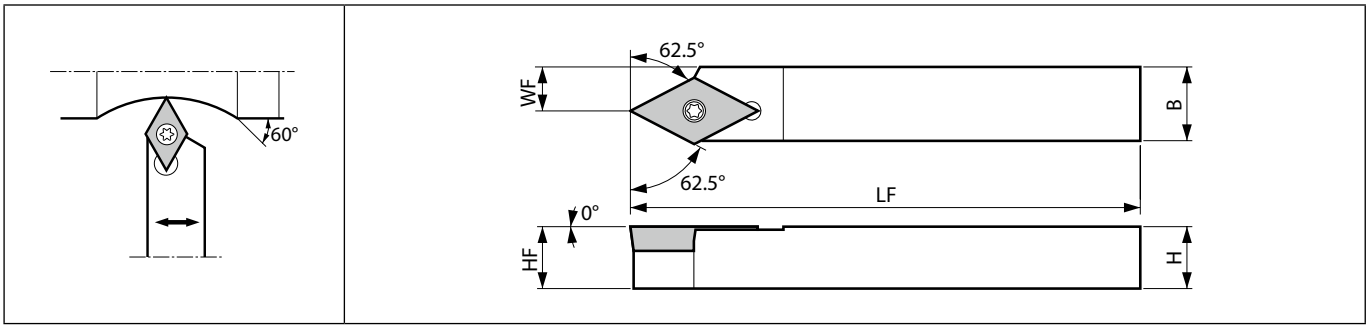


Right-hand shown

### Toolholder dimensions

| Description | | Availability | | Dimension (mm) | | | | | Standard corner-R(RE) | Spare parts | | Applicable inserts |
|---|---|---|---|---|---|---|---|---|---|---|---|---|
| | | | | | | | | | | Screw | Wrench | |
| | | R | L | H | B | HF | LF | WF | | | | |
| SDNC R/L | 1010JX-07F | ● | ● | 10 | 10 | 10 | 120 | 7 | 0.2 | SB-2570TR | FT-8 | DC□T0702...<br>DC□W0702... |

## SDNC (External turning / External copying)

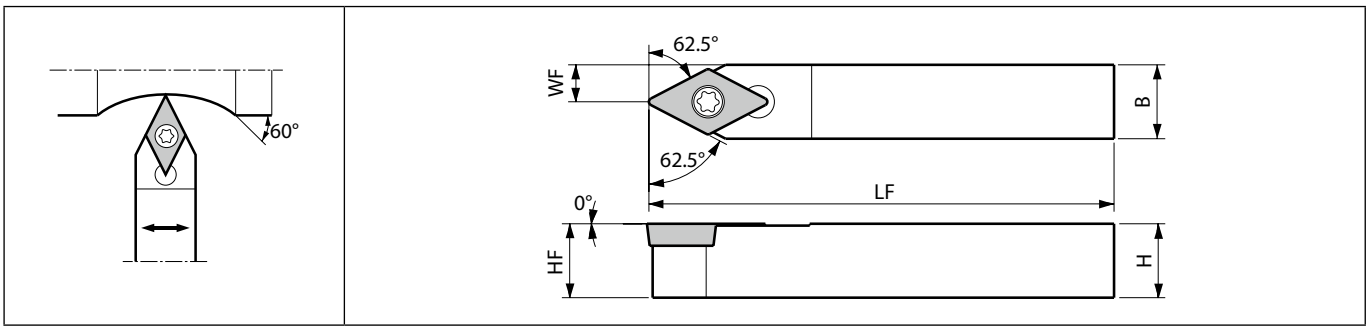


### Toolholder dimensions

| Description | | Availability | Dimension (mm) | | | | | Standard corner-R(RE) | Spare parts | | | Applicable inserts |
|---|---|---|---|---|---|---|---|---|---|---|---|---|
| | | | | | | | | | Screw | Wrench | Wrench | |
| | | N | H | B | HF | LF | WF | | | | | |
| SDNCN | 0808F-07 | ● | 8 | 8 | 8 | 85 | 4 | 0.2 | SB-2570TR | - | FT-8 | DC□T0702...<br>DC□W0702... |
| | 1010JX-07 | ● | 10 | 10 | 10 | 120 | 5 | | | | | |
| | 1212JX-07 | ● | 12 | 12 | 12 | | 6 | | | | | |
| SDNCN | 1010F-11 | ● | 10 | 10 | 10 | 80 | 5 | 0.2 | SB-4085TR | FT-15 | - | DC□T11T3...<br>DC□W11T3... |
| | 1010JX-11 | ● | | | | 120 | | | | | | |
| | 1212F-11 | ● | 12 | 12 | 12 | 85 | 6 | | | | | |
| | 1212JX-11 | ● | | | | 120 | | | | | | |
| | 1616H-11 | ● | 16 | 16 | 16 | 100 | 8 | | | | | |
| | 1616JX-11 | ● | | | | 120 | | | | | | |

● : Standard item

E

Small tools

## Applicable inserts (SDLC-FF / SDXC / SDNC-F / SDNC)

| Applications | Minute ap | Finishing | Finishing | Finishing | Finishing | Finishing - Medium | Finishing | Finishing |
|---|---|---|---|---|---|---|---|---|
| Insert | | | | | | | | |
| Chipbreaker type | CF | GF | SKS | SK | CK | GQ | PP | GP |
| Page | B68 | B68 | B68 | B68 | B68 | B69 | B69 | B69 |
| Applications | Finishing - Medium | Finishing - Medium | Medium | Medium | Finishing | Finishing | Low feed | Low feed |
| Insert | | 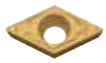 | | | 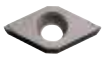 | 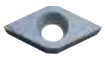 | | 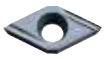 |
| Chipbreaker type | GK | HQ | STD | MF | R/L-F | R/L-FSF | R/L-U | R/L-USF |
| Page | B70 | B70 | B70 | B70 | B72, B73 | B72 | B74~B76 | B74 |
| Applications | Low feed | Low feed | Low carbon steel | Low carbon steel | Stainless steel / Heat-resistant alloys | Cast iron | Non-ferrous metals | Non-ferrous metals |
| Insert | 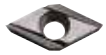 | 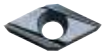 | | | | | | |
| Chipbreaker type | R/L-J | R/L-JSF | XP | XQ | MQ | No CB | AP | R/L-A3 |
| Page | B77 | B76 | B71 | B71 | B71 | B78 | B78 | B78 |
| Applications | Non-ferrous metals | Non-ferrous metals | Non-ferrous metals | Hard materials | | | | |
| Insert | | | | | | | | |
| Chipbreaker type | AH | PCD | APD | CBN | | | | |
| Page | B78 | C42 | C42 | C22 | | | | |

Recommended cutting conditions ➡ E65, E66

## SDLP-FF (External turning / External copying, Screw clamp, Without offset)

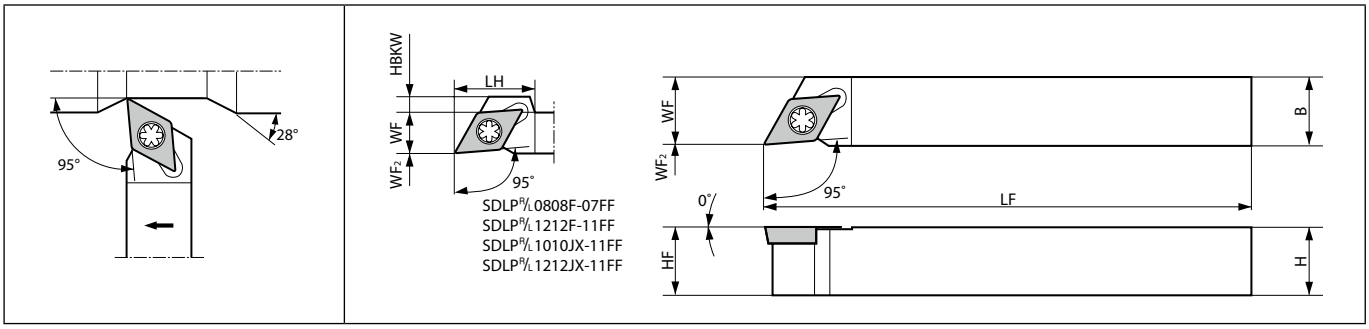


Right-hand shown

## Toolholder dimensions

| Description | | Availability R | Availability L | Dimension (mm) H | B | LH | HF | HBKW | LF | WF | $WF_2$ | Standard corner-R(RE) | Spare parts: Screw | Spare parts: Wrench | Spare parts: Wrench | Applicable inserts |
|---|---|---|---|---|---|---|---|---|---|---|---|---|---|---|---|---|
| SDLPR/L | 0808F-07FF | ● | ● | 8 | 8 | 14 | 8 | 0.5 | 85 | 8 | 0 | 0.2 | SB-2570TR | - | FT-8 | DPET0702... |
| | 1010JX-07FF | ● | ● | 10 | 10 | - | 10 | - | 120 | 10 | | | | | | |
| SDLPR/L | 1010JX-11FF | ● | ● | 10 | 10 | 20 | 10 | 4 | 120 | 10 | 0 | 0.2 | SB-4085TR | FT-15 | - | DPET11T3... |
| | 1212JX-11FF | ● | ● | 12 | 12 | | 12 | 2 | | 12 | | | | | | |
| | 1616JX-11FF | ● | ● | 16 | 16 | - | 16 | - | | 16 | | | | | | |

## Applicable inserts

| Applications | Finishing | Low feed |
|---|---|---|
| Insert | 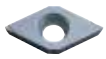 | 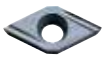 |
| Chipbreaker type | R/L-**FSF** | R/L-**USF** |
| Page | **B79** | **B79** |

Recommended cutting conditions ➔ **E65, E66**

● : Standard item

## STGC (External turning)

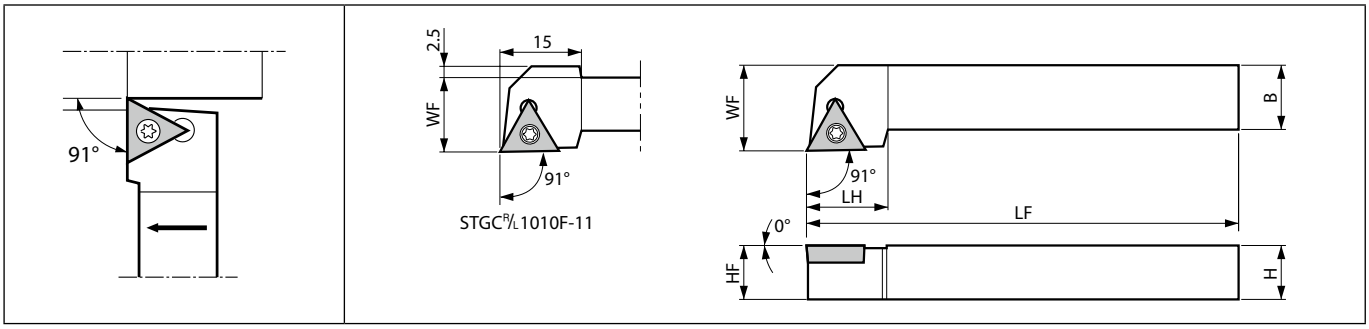


Right-hand shown

## Toolholder dimensions

| Description | | Availability R | Availability L | Dimension (mm) H | B | LH | HF | LF | WF | Standard corner-R(RE) | Spare parts: Screw | Spare parts: Wrench | Applicable inserts |
|---|---|---|---|---|---|---|---|---|---|---|---|---|---|
| STGCR/L | 0808E-08 | ● | | 8 | 8 | 12 | 8 | 70 | 10 | 0.2 | SB-2050TR | FT-6 | TC□T0802...<br>TC□W0802... |
| | 1010F-08 | ● | ● | 10 | 10 | | 10 | 80 | 12 | | | | |
| STGCR/L | 1010F-11 | ● | ● | 10 | 10 | 15 | 10 | 80 | 14 | 0.4 | SB-2570TR | FT-8 | TC□T1103...<br>TC□W1103... |
| | 1212H-11 | ● | ● | 12 | 12 | | 12 | 100 | 16 | | | | |
| | 1616H-11 | ● | ● | 16 | 16 | | 16 | | 20 | | | | |
| | 2020K-11 | ● | ● | 20 | 20 | | 20 | 125 | 25 | | | | |
| | 2525M-11 | ● | ● | 25 | 25 | 20 | 25 | 150 | 32 | | | | |

## Applicable inserts

| Applications | Low feed | Low feed | Cast iron | Non-ferrous metals | Non-ferrous metals |
|---|---|---|---|---|---|
| Insert | | | | | |
| Chipbreaker type | R/L-U | R/L-USF | No CB | R/L-A3 | PCD |
| Page | B86 | B85 | B87 | B87 | C45 |

Recommended cutting conditions ➡ E65, E66

● : Standard item

## STGP (External turning)

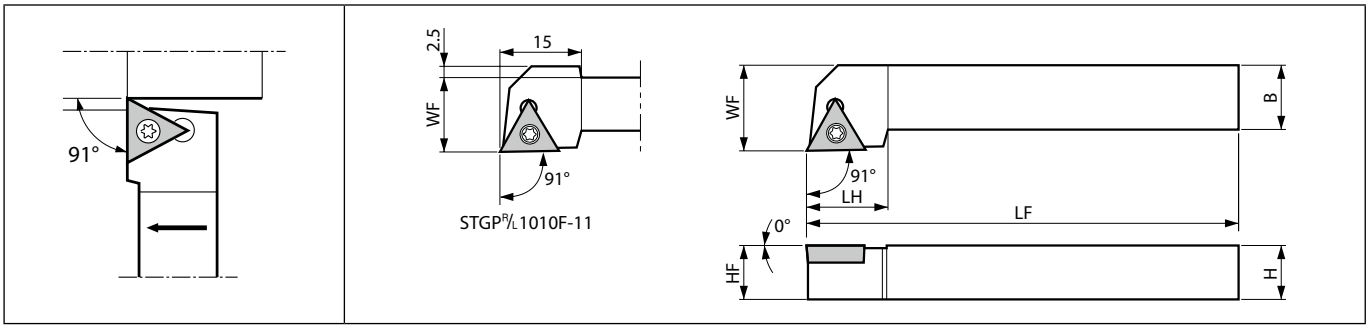


Right-hand shown

## Toolholder dimensions

| Description | | Availability R | Availability L | H | B | LH | HF | LF | WF | Standard corner-R(RE) | Spare parts: Screw | Spare parts: Wrench | Applicable inserts |
|---|---|---|---|---|---|---|---|---|---|---|---|---|---|
| STGPR | 0808E-08 | ● | | 8 | 8 | 12 | 8 | 70 | 10 | 0.2 | SB-2050TR | FT-6 | TP□B0802... , TP□H0802... TP□T0802... |
| STGP R/L | 1010F-11 | ● | ● | 10 | 10 | 15 | 10 | 80 | 14 | 0.2 | SB-3080TR | FT-10 | TP□B1103... TP□H1103... TP□T1103... |
| | 1212H-11 | ● | ● | 12 | 12 | | 12 | 100 | 16 | | | | |
| | 1616H-11 | ● | ● | 16 | 16 | | 16 | | 20 | | | | |

## Applicable inserts

| Applications | Minute ap | Finishing | Finishing | Finishing - Medium | Finishing | Finishing | Low feed | Medium |
|---|---|---|---|---|---|---|---|---|
| Insert | | | | | | | | |
| Chipbreaker type | CF | PP | GP | HQ | R/L | R/L-FSF | R/L-USF | R/L-H |
| Page | B88 | B88 | B89 | B89 | B90, B91 | B92 | B94 | B93 |
| Applications | Low carbon steel | Low carbon steel | Cast iron | Non-ferrous metals | Non-ferrous metals | Non-ferrous metals | Hard materials | |
| Insert | | | | | | | | |
| Chipbreaker type | XP | XQ | No CB | AP | PCD | APD | CBN | |
| Page | B89 | B89 | B94 | B94 | C46, C47 | C47 | C23 | |

Recommended cutting conditions ➡ E65, E66

● : Standard item

E

Small tools

## AVJB-FF (External turning / External copying , Back clamp, Without offset)

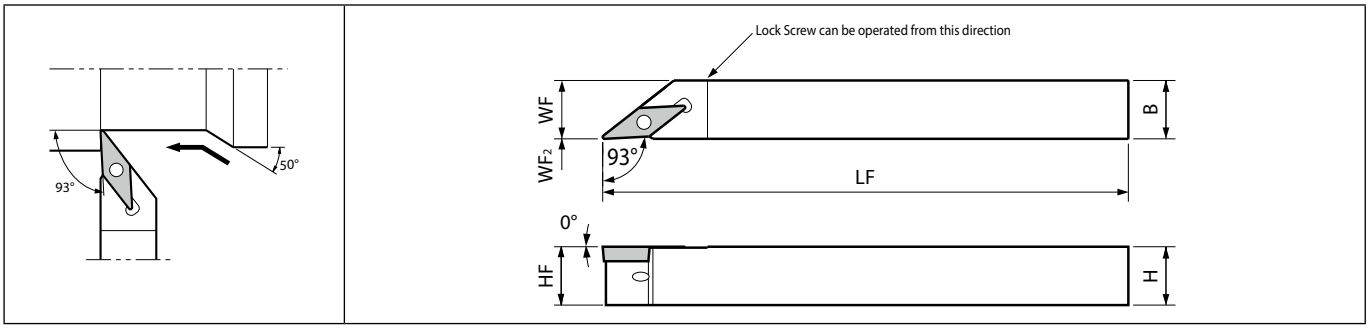


Right-hand shown

### Toolholder dimensions

| Description | | Availability R | Availability L | Dimension (mm) H | B | HF | LF | WF | WF2 | Standard corner-R(RE) | Spare parts: Anchor pin | Spare parts: Lock screw | Spare parts: Wrench | Applicable inserts |
|---|---|---|---|---|---|---|---|---|---|---|---|---|---|---|
| AVJB R/L | 1010JX-11FF | ● | ● | 10 | 10 | 10 | 120 | 10 | 0 | 0.4 | LPF-11 | HSB4X8 R/L | FH-2 | VB□T1103... VB□W1103... |
| | 1212JX-11FF | ● | ● | 12 | 12 | 12 | | 12 | | | LPF-1113 | | | |
| | 1616JX-11FF | ● | ● | 16 | 16 | 16 | | 16 | | | LPF-1117 | | | |

Lock screw : HSB4X8R for Right-hand Toolholder, HSB4X8L for Left-hand Toolholder.

## SVJB-FF (External turning / External copying, Screw clamp, Without offset)

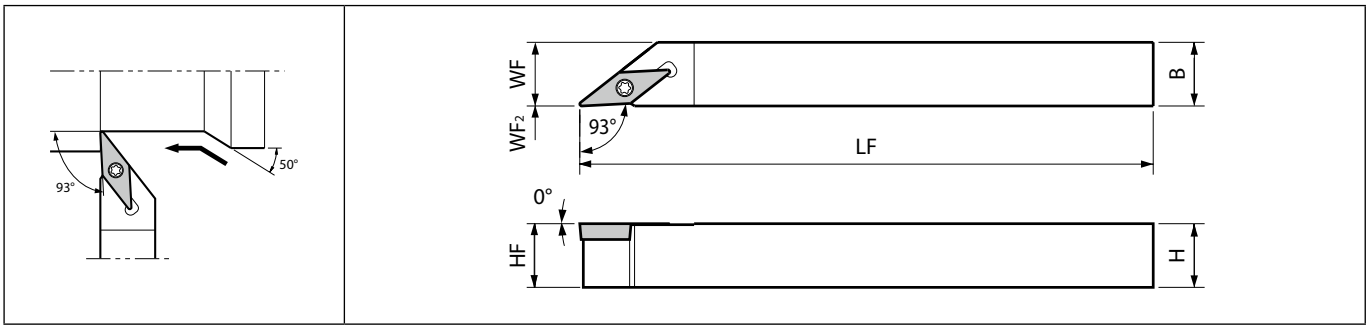


Right-hand shown

### Toolholder dimensions

| Description | | Availability R | Availability L | Dimension (mm) H | B | HF | LF | WF | WF2 | Standard corner-R(RE) | Spare parts: Screw | Spare parts: Wrench | Applicable inserts |
|---|---|---|---|---|---|---|---|---|---|---|---|---|---|
| SVJB R/L | 1010JX-11FF | ● | ● | 10 | 10 | 10 | 120 | 10 | 0 | 0.4 | SB-2570TR | FT-8 | VB□T1103... VB□W1103... |
| | 1212JX-11FF | ● | ● | 12 | 12 | 12 | | 12 | | | | | |
| | 1616JX-11FF | ● | ● | 16 | 16 | 16 | | 16 | | | | | |
| | 2020JX-11FF | ● | ● | 20 | 20 | 20 | | 20 | | | | | |

● : Standard item

## SVJB-FFJCTM (External turning / External copying, Screw clamp, Without offset, Coolant-though holder)

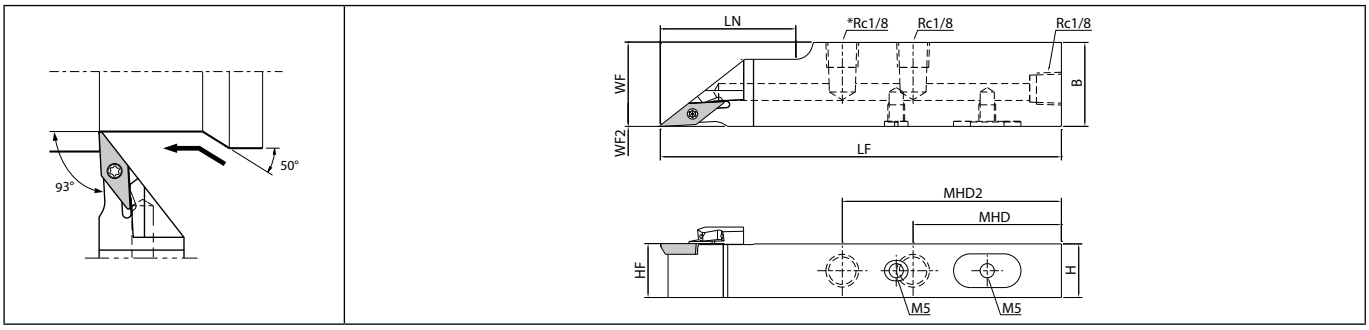


Right-hand shown | SVJBR12…: 2-Rc1/8

### Toolholder dimensions

| Description | | Availability | Dimension (mm) | | | | | | | | | Standard corner-R(RE) | Coolant hole | Spare parts | | | | Applicable inserts |
|---|---|---|---|---|---|---|---|---|---|---|---|---|---|---|---|---|---|---|
| | | | | | | | | | | | | | | Plug | Plug | Screw | Wrench | |
| | | R | H | B | MHD | MHD2 | HF | LF | LN | WF | $WF_2$ | | | | | | | |
| SVJBR | 1218JX-11FFJCTM | ● | 12 | 18 | 54 | - | 12 | 120 | 28 | 18 | 0 | 0.4 | Yes | GP-1 | HS5X4LP | SB-2570TR | FT-8 | VB□T1103... VB□W1103... |
| | 1625JX-11FFJCTM | ● | 16 | 25 | 44 | 65 | 16 | | 40 | 25 | | | | | | | | |
| | 2025JX-11FFJCTM | ● | 20 | | | | 20 | | | | | | | | - | | | |

Please see page **H16** and **H17** for piping parts of coolant-through holders.

## SVJB (External turning / External copying, Screw clamp)

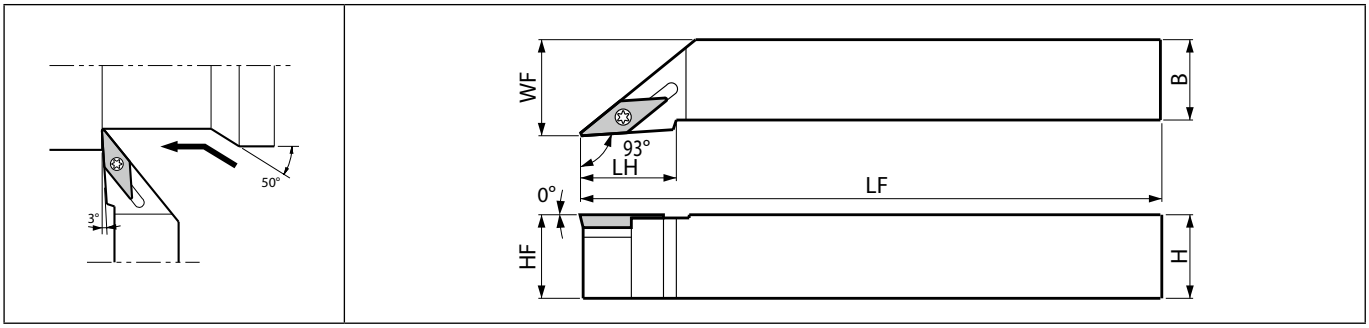


Right-hand shown

### Toolholder dimensions

| Description | | Availability | | Dimension (mm) | | | | | | Standard corner-R(RE) | Spare parts | | | | | | Applicable inserts |
|---|---|---|---|---|---|---|---|---|---|---|---|---|---|---|---|---|---|
| | | | | | | | | | | | Screw | Wrench | Wrench | Shim screw | Shim | Wrench | |
| | | R | L | H | B | LH | HF | LF | WF | | | | | | | | |
| SVJB$^{R/L}$ | 2020K-11 | ● | ● | 20 | 20 | 30 | 20 | 125 | 25 | 0.4 | SB-2570TR | - | FT-8 | - | - | - | VB□T1103... VB□W1103... |
| | 2525M-11 | ● | ● | 25 | 25 | 35 | 25 | 150 | 32 | | | | | | | | |
| SVJB$^{R/L}$ | 2020K-16N | ● | ● | 20 | 20 | 30 | 20 | 125 | 25 | 0.8 | SB-40125TRN | FT-15 | - | SS-4N | SVN-32N (SVN-32S*) | LW-4 | VB□T1604..., VB□W1604... VC□T1604... |
| | 2525M-16N | ● | ● | 25 | 25 | | 25 | 150 | 32 | | | | | | | | |

When using inserts whose corner-R(RE) is 0.2 or 0.4mm, shim (SVN-32S) is recommended (sold separately).

● : Standard item

E

Small tools

## SVPB (External turning / External facing / External copying / Undercutting, Screw clamp)

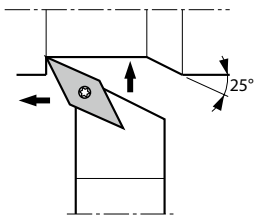


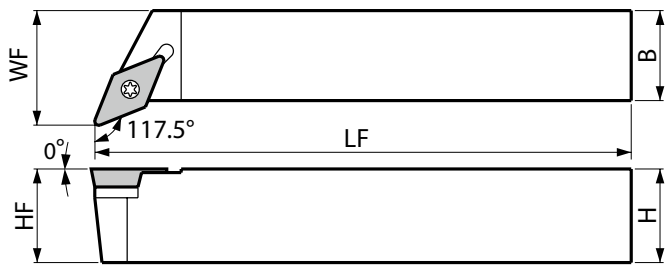


Right-hand shown

## Toolholder dimensions

| Description | | Availability R | Availability L | Dimension (mm) H | B | HF | LF | WF | Standard corner-R(RE) | Spare parts: Screw | Wrench | Wrench | Shim screw | Shim | Wrench | Applicable inserts |
|---|---|---|---|---|---|---|---|---|---|---|---|---|---|---|---|---|
| SVPB R/L | 1010JX-11 | ● | ● | 10 | 10 | 10 | 120 | 14.5 | 0.4 | SB-2570TR | - | FT-8 | - | - | - | VB□T1103...<br>VB□W1103... |
| | 1212JX-11 | ● | ● | 12 | 12 | 12 | | 16.5 | | | | | | | | |
| | 1616JX-11 | ● | ● | 16 | 16 | 16 | | 20.5 | | | | | | | | |
| | 2020K-11 | ● | ● | 20 | 20 | 20 | 125 | 25 | | | | | | | | |
| | 2525M-11 | ● | ● | 25 | 25 | 25 | 150 | 32 | | | | | | | | |
| SVPB R/L | 2020K-16N | ● | ● | 20 | 20 | 20 | 125 | 25 | 0.8 | SB-40125TRN | FT-15 | - | SS-4N | SVN-32N<br>(SVN-32S*) | LW-4 | VB□T1604..., VB□W1604...<br>VC□T1604... |
| | 2525M-16N | ● | ● | 25 | 25 | 25 | 150 | 32 | | | | | | | | |

When using inserts whose corner-R(RE) is 0.2 or 0.4mm, shim (SVN-32S) is recommended (sold separately).

## Undercutting diameter of SVPB

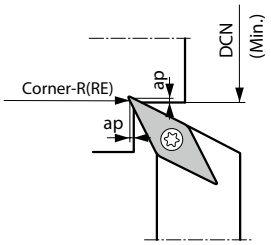


| Corner-R (RE) | ap (mm) | DCN (Min.) |
|---|---|---|
| 0.4 | 0.5 | ø25 |
| | 1 | ø30 |
| 0.8 | 0.5 | ø45 |
| | 1 | ø55 |

● : Standard item

## SVVB (External turning / External copying)

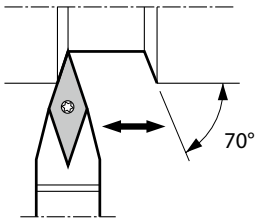


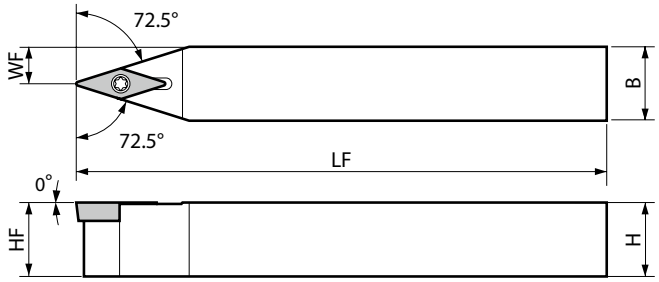


## Toolholder dimensions

| Description | | Availability | Dimension (mm) | | | | | Standard corner-R(RE) | Spare parts | | | | | | Applicable inserts |
|---|---|---|---|---|---|---|---|---|---|---|---|---|---|---|---|
| | | | | | | | | | Screw | Wrench | Wrench | Shim screw | Shim | Wrench | |
| | | N | H | B | HF | LF | WF | | | | | | | | |
| SVVBN | 1010F-11 | ● | 10 | 10 | 10 | 80 | 5 | 0.4 | SB-2570TR | - | FT-8 | - | - | - | VB□T1103...<br>VB□W1103... |
| | 1010JX-11 | ● | | | | 120 | | | | | | | | | |
| | 1212F-11 | ● | 12 | 12 | 12 | 85 | 6 | | | | | | | | |
| | 1212JX-11 | ● | | | | 120 | | | | | | | | | |
| | 1616H-11 | ● | 16 | 16 | 16 | 100 | 8 | | | | | | | | |
| | 1616JX-11 | ● | | | | 120 | | | | | | | | | |
| | 2020K-11 | ● | 20 | 20 | 20 | 125 | 10 | | | | | | | | |
| | 2525M-11 | ● | 25 | 25 | 25 | 150 | 12.5 | | | | | | | | |
| SVVBN | 2020K-16N | ● | 20 | 20 | 20 | 125 | 10 | 0.8 | SB-40125TRN | FT-15 | - | SS-4N | SVN-32N<br>(SVN-32S*) | LW-4 | VB□T1604..., VB□W1604...<br>VC□T1604... |
| | 2525M-16N | ● | 25 | 25 | 25 | 150 | 12.5 | | | | | | | | |

When using inserts whose corner-R(RE) is 0.2 or 0.4mm, shim (SVN-32S) is recommended (sold separately).

## Applicable inserts (AVJB-FF / SVJB-FF / SVJB-FFJCTM / SVJB / SVPB / SVVB)

| Applications | Finishing | Finishing | Finishing | Finishing - Medium | Finishing | Finishing | Finishing - Medium | Non-ferrous metals |
|---|---|---|---|---|---|---|---|---|
| Insert | | | | | | | | |
| Chipbreaker type | PP | GP | VF | HQ | P/L-F | P/L-FSF | P/L-Y | PCD |
| Page | B97 | B97 | B97 | B97 | B98 | B98 | B99 | C49 |

| Applications | Hard materials |
|---|---|
| Insert | |
| Chipbreaker type | CBN |
| Page | C26 |

Recommended cutting conditions ➡ E65, E66

● : Standard item

E

Small tools

## SVJC-FF (External turning / External copying, Screw clamp, Without offset)

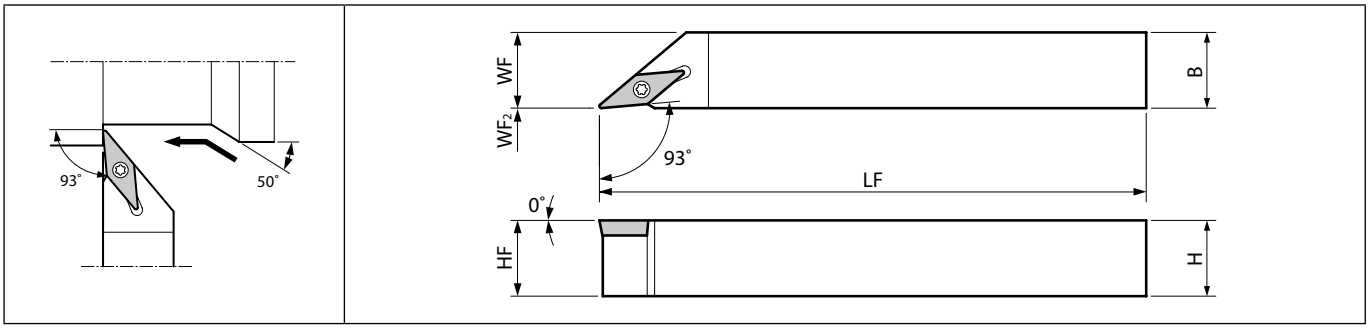


Right-hand shown

### Toolholder dimensions

| Description | | Availability R | Availability L | Dimension (mm) H | B | HF | LF | WF | WF2 | Standard corner-R(RE) | Spare parts: Screw | Spare parts: Wrench | Applicable inserts |
|---|---|---|---|---|---|---|---|---|---|---|---|---|---|
| SVJC R/L | 1010JX-11FF | ● | ● | 10 | 10 | 10 | 120 | 10 | 0 | 0.2 | SB-2570TR | FT-8 | VC□T1103... |
| | 1212F-11FF | ● | ● | 12 | 12 | 12 | 85 | 12 | | | | | |
| | 1212JX-11FF | ● | ● | | | | 120 | | | | | | |
| | 1616JX-11FF | ● | ● | 16 | 16 | 16 | | 16 | | | | | |
| | 2020JX-11FF | ● | ● | 20 | 20 | 20 | | 20 | | | | | |

## SVLC-FF (External turning / External copying, Screw clamp, Without offset)

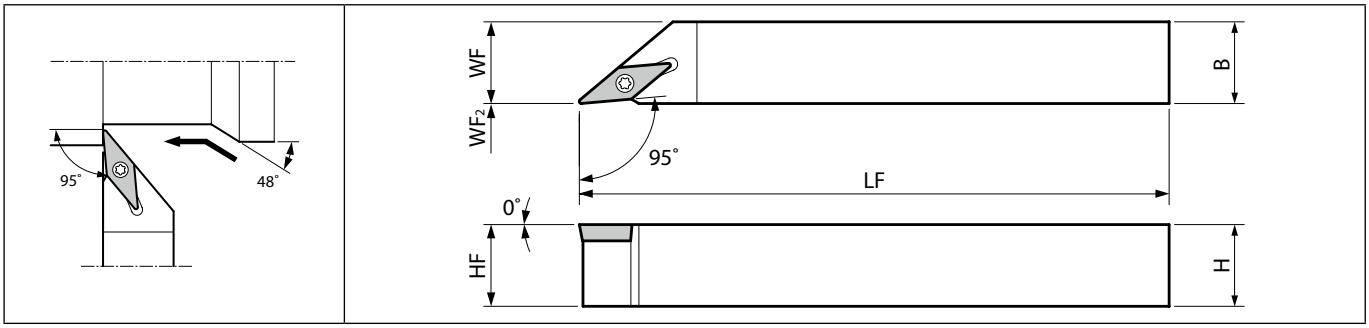


Right-hand shown

### Toolholder dimensions

| Description | | Availability R | Availability L | Dimension (mm) H | B | HF | LF | WF | WF2 | Standard corner-R(RE) | Spare parts: Screw | Spare parts: Wrench | Applicable inserts |
|---|---|---|---|---|---|---|---|---|---|---|---|---|---|
| SVLC R/L | 1212F-11FF | ● | ● | 12 | 12 | 12 | 85 | 12 | 0 | 0.2 | SB-2570TR | FT-8 | VC□T1103... |
| | 1212JX-11FF | ● | ● | | | | 120 | | | | | | |
| | 1616JX-11FF | ● | ● | 16 | 16 | 16 | | 16 | | | | | |

● : Standard item

## SVPC-FF (External turning / External facing / External copying / Undercutting, Screw clamp, Without offset)

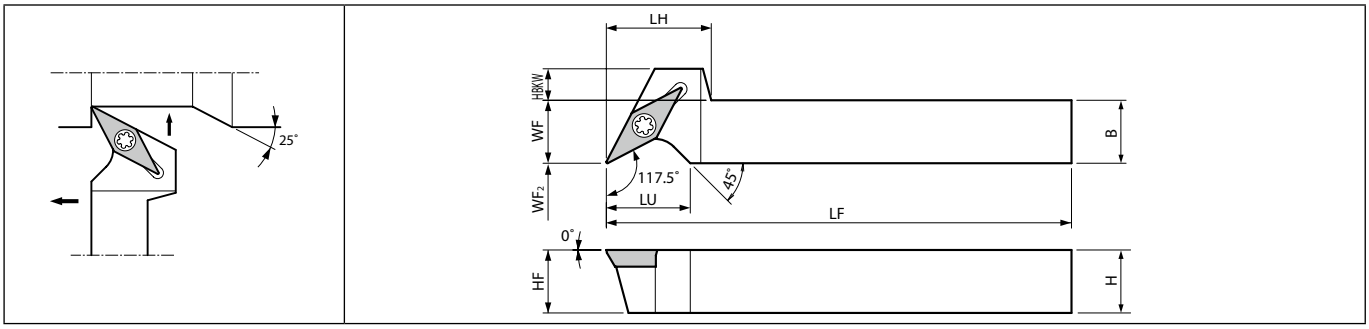


Right-hand shown

### Toolholder dimensions

| Description | | Availability | Dimension (mm) | | | | | | | | | Standard corner-R(RE) | Spare parts | | Applicable inserts |
|---|---|---|---|---|---|---|---|---|---|---|---|---|---|---|---|
| | | | | | | | | | | | | | Screw | Wrench | |
| | | R | H | B | LH | HF | HBKW | LF | LU | WF | $WF_2$ | | | | |
| SVPCR | 1010JX-11FF | ● | 10 | 10 | 20 | 10 | 8 | 120 | 16 | 10 | 0 | 0.2 | SB-2570TR | FT-8 | VC□T1103... |
| | 1212F-11FF | ● | 12 | 12 | | 12 | 6 | 85 | | 12 | | | | | |
| | 1212JX-11FF | ● | | | | | | 120 | | | | | | | |
| | 1616JX-11FF | ● | 16 | 16 | | 16 | 2 | | 20 | 16 | | | | | |

### Undercutting diameter of SVPC-FF

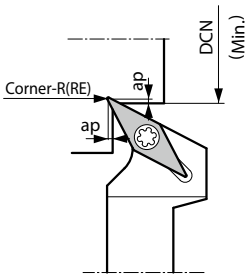


| Corner-R (RE) | ap (mm) | DCN (Min.) |
|---|---|---|
| 0.2 | 0.5 | ø20 |
| | 0.7 | ø25 |

● : Standard item

## SVVC (External turning / External copying)

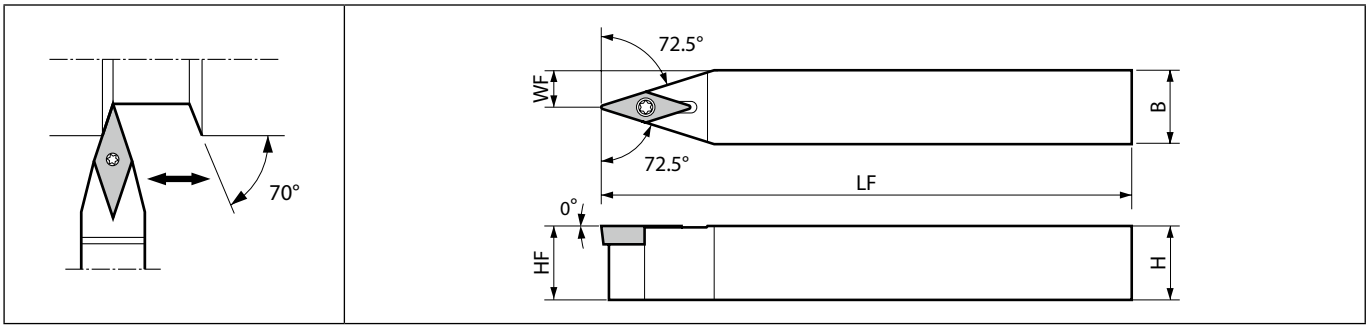


## Toolholder dimensions

| Description | | Availability | Dimension (mm) | | | | | Standard corner-R(RE) | Spare parts | | Applicable inserts |
|---|---|---|---|---|---|---|---|---|---|---|---|
| | | | | | | | | | Screw | Wrench | |
| | | N | H | B | HF | LF | WF | | | | |
| SVVCN | 1010JX-11 | ● | 10 | 10 | 10 | 120 | 5 | 0.2 | SB-2570TR | FT-8 | VC□T1103... |
| | 1212JX-11 | ● | 12 | 12 | 12 | | 6 | | | | |
| | 1616JX-11 | ● | 16 | 16 | 16 | | 8 | | | | |

## Applicable inserts (SVJC-FF / SVLC-FF / SVPC-FF / SVVC)

| Applications | Minute ap | Finishing | Finishing | Finishing | Finishing - Medium |
|---|---|---|---|---|---|
| Insert | | | | | 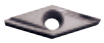 |
| Chipbreaker type | CF | GF | SKS | R/L-F | R/L-Y |
| Page | B100 | B100 | B100 | B101 | B101 |

Recommended cutting conditions ➡ E65, E66

● : Standard item

## SVJP-FF (External turning / External copying, Screw clamp, Without offset)

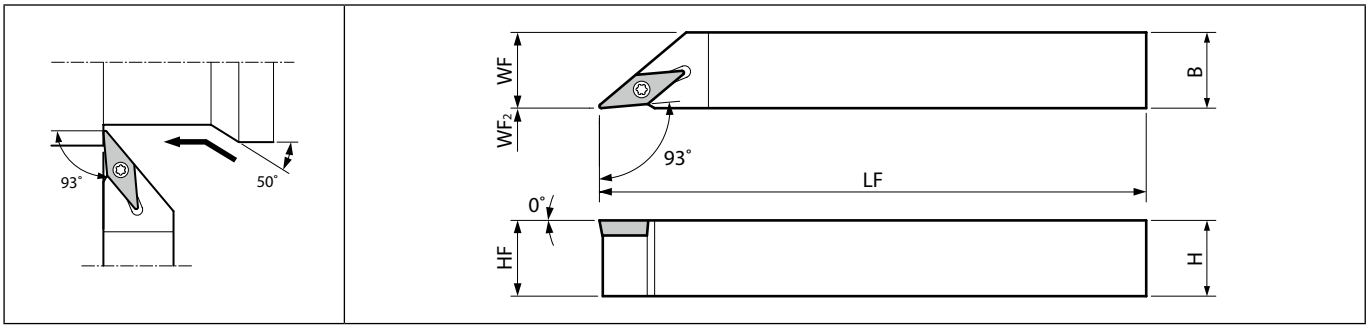


Right-hand shown

### Toolholder dimensions

| Description | | Availability R | Availability L | Dimension (mm) H | B | HF | LF | WF | WF2 | Standard corner-R(RE) | Spare parts: Screw | Spare parts: Wrench | Applicable inserts |
|---|---|---|---|---|---|---|---|---|---|---|---|---|---|
| SVJP R/L | 1212F-11FF | ● | ● | 12 | 12 | 12 | 85 | 12 | 0 | 0.2 | SB-2570TR | FT-8 | VP□T1103... |
| | 1212JX-11FF | ● | ● | | | | 120 | | | | | | |
| | 1616JX-11FF | ● | ● | 16 | 16 | 16 | | 16 | | | | | |
| | 2020JX-11FF | ● | ● | 20 | 20 | 20 | | 20 | | | | | |

## SVJP-FFJCTM (External turning / External copying, Screw clamp, Without offset, Coolant-though holder)

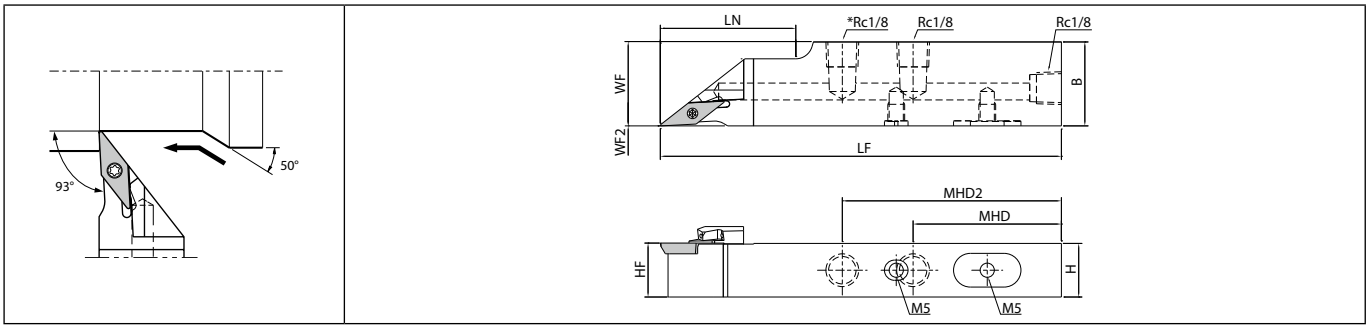


Right-hand shown | SVJPR12…: 2-Rc1/8

### Toolholder dimensions

| Description | | Availability R | H | B | MHD | MHD2 | HF | LF | LN | WF | WF2 | Standard corner-R(RE) | Coolant hole | Spare parts: Plug | Spare parts: Plug | Spare parts: Screw | Spare parts: Wrench | Applicable inserts |
|---|---|---|---|---|---|---|---|---|---|---|---|---|---|---|---|---|---|---|
| SVJPR | 1218JX-11FFJCTM | ● | 12 | 18 | 54 | - | 12 | 120 | 28 | 18 | 0 | 0.2 | Yes | GP-1 | HS5X4LP | SB-2570TR | FT-8 | VP□T1103... |
| | 1625JX-11FFJCTM | ● | 16 | 25 | 44 | 65 | 16 | | 40 | 25 | | | | | | | | |
| | 2025JX-11FFJCTM | ● | 20 | | | | 20 | | | | | | | | - | | | |

Please see page **H16** and **H17** for piping parts of coolant-through holders.

● : Standard item

## SVLP-FF (External turning / External copying, Screw clamp, Without offset)

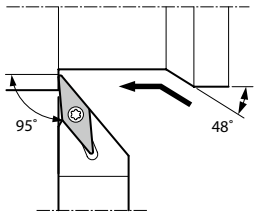


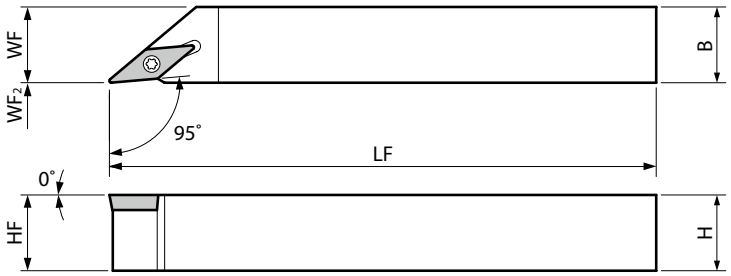


Right-hand shown

E

Small tools

## Toolholder dimensions

| Description | | Availability R | Availability L | Dimension (mm) H | B | HF | LF | WF | WF2 | Standard corner-R(RE) | Spare parts: Screw | Spare parts: Wrench | Applicable inserts |
|---|---|---|---|---|---|---|---|---|---|---|---|---|---|
| SVLP R/L | 1010JX-08FF | ● | ● | 10 | 10 | 10 | 120 | 10 | 0 | 0.1 | SB-2050TR | FT-6 | VP□T0802... |
| | 1212F-08FF | ● | ● | 12 | 12 | 12 | 85 | 12 | | | | | |
| | 1212JX-08FF | ● | ● | | | | 120 | | | | | | |
| | 1616JX-08FF | ● | ● | 16 | 16 | 16 | | 16 | | | | | |
| SVLP R/L | 1212F-11FF | ● | ● | 12 | 12 | 12 | 85 | 12 | 0 | 0.2 | SB-2570TR | FT-8 | VP□T1103... |
| | 1212JX-11FF | ● | ● | | | | 120 | | | | | | |
| | 1616JX-11FF | ● | ● | 16 | 16 | 16 | | 16 | | | | | |

● : Standard item

## SVPP-FF (External turning / External facing / External copying / Undercutting, Screw clamp, Without offset)

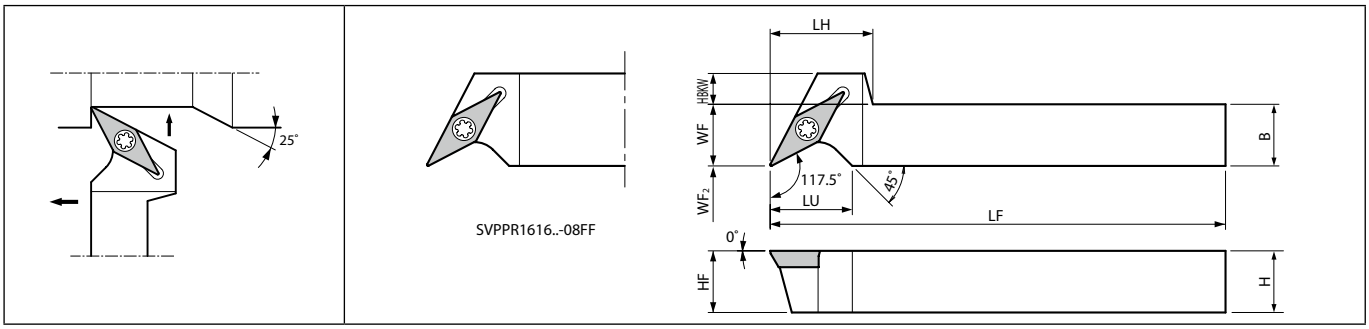


Right-hand shown

### Toolholder dimensions

| Description | | Availability | Dimension (mm) | | | | | | | | | Standard corner-R(RE) | Spare parts | | Applicable inserts |
|---|---|---|---|---|---|---|---|---|---|---|---|---|---|---|---|
| | | | | | | | | | | | | | Screw | Wrench | |
| | | R | H | B | LH | HF | HBKW | LF | LU | WF | $WF_2$ | | | | |
| SVPPR | 1010JX-08FF | ● | 10 | 10 | 16 | 10 | 4 | 120 | 12 | 10 | 0 | 0.1 | SB-2050TR | FT-6 | VP□T0802... |
| | 1212F-08FF | ● | 12 | 12 | | 12 | 2 | 85 | | 12 | | | | | |
| | 1212JX-08FF | ● | | | | | | 120 | | | | | | | |
| | 1616JX-08FF | ● | 16 | 16 | - | 16 | - | | | 16 | | | | | |
| SVPPR | 1010JX-11FF | ● | 10 | 10 | 20 | 10 | 8 | 120 | 16 | 10 | 0 | 0.2 | SB-2570TR | FT-8 | VP□T1103... |
| | 1212F-11FF | ● | 12 | 12 | | 12 | 6 | 85 | | 12 | | | | | |
| | 1212JX-11FF | ● | | | | | | 120 | | | | | | | |
| | 1616JX-11FF | ● | 16 | 16 | | 16 | 2 | | | 16 | | | | | |

### Undercutting diameter of SVPP-FF

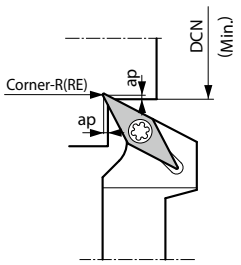


| Corner-R (RE) | ap (mm) | DCN (Min.) |
|---|---|---|
| 0.2 | 0.5 | ø20 |
| | 1 | ø25 |

### Applicable inserts (SVJP-FF / SVJP-FFJCTM / SVLP-FF / SVPP-FF)

| Applications | Minute ap | Finishing | Finishing | Finishing | Finishing | Finishing | Low feed | Low feed |
|---|---|---|---|---|---|---|---|---|
| Insert | | | | | | | | |
| Chipbreaker type | CF | SKS | CK | GF | R/L-F | R/L-FSF | R/L-U | R/L-USF |
| Page | B102 | B102 | B102 | B102 | B103 | B103 | B104 | B104 |

| Applications | Low feed |
|---|---|
| Insert | |
| Chipbreaker type | R/L-J |
| Page | B104 |

Recommended cutting conditions ➡ E65, E66

● : Standard item

E

Small tools

25° Insert profiling tools

# ZBMT Series

Unique clamping structure and a wide lineup of external toolholders and boring bars. High precision and stable machining in a wide range of applications including copying, undercutting, tapering, V-slotting, spherical machining, and more.

## 1 Newly developed unique-clamping mechanism achieves a higher rigidity

### Side lock mechanism

**Unique design holds insert at 2 points**
**Safe even for insert with small tip angle that is difficult to mount**

Indentations for screw clamp are designed into the insert's body

Uses a large screw size (M4)

Insert displacement during facing comparison (Internal evaluation)

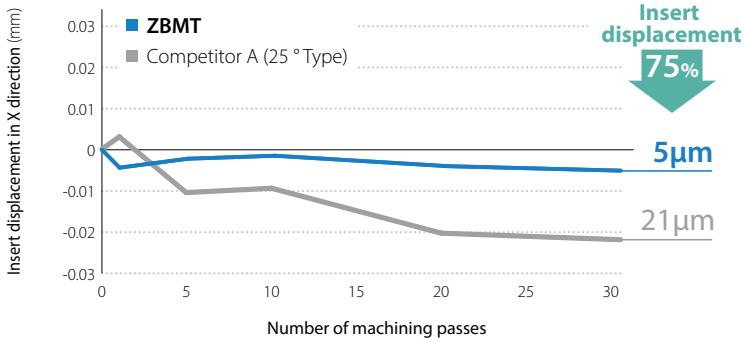


Cutting conditions : Vc = 230 m/min, ap = 0.3 mm, f = 0.15 mm/rev, Wet Workpiece material SCM435

*The above figures are not guaranteed. It depends on cutting conditions.

### Check

By controlling insert displacement,

- Machining precision is stabilized and long tool life is enable
- Reduces defect rate due to sudden dimensional deviation

## Provides high quality and stable machining in various machining applications

**Excellent performance in various machining applications including copying, undercutting, tapering, V-slotting, spherical machining, etc.**

Shaft copying

Internal undercutting

End face tapering

CG images

## 2 Unique holder design to meet customers' needs

**Both boring bars and external toolholders are compatible with internal coolant.**

Uses a clamp with a small thickness that does not prevent chip flow

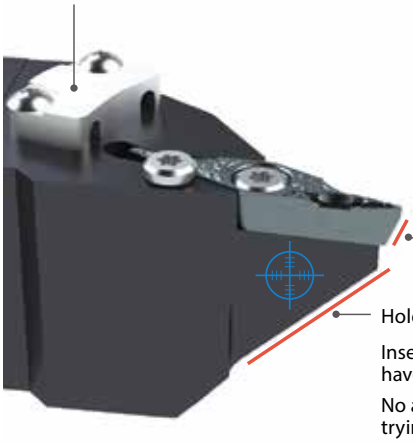

**Unique double coolant hole design**

Supplies coolant directly to the cutting edge and provides improved chip evacuation and long tool life (Coolant discharge direction: Fine adjustment possible)

*Though coolant stream hits side clamp screw, machining performance is not affected

*Pressure resistance: ~ 3 MPa

**Fine tuned and adjustable**

± 4 ° Adjustable oscillation

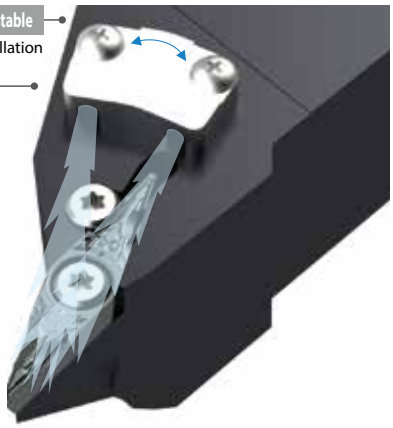

**Easy to use for facing**

Insert corner : 2-Step Positive Type (20°)

Holder: Tapered shape

Inserts and toolholders have a unique end shape

No additional machining is required when trying to avoid interference with workpiece.

**Effective for facing applications**

## 3 New GF chipbreaker for ZBMT reduces chip control issues at minute D.O.C.

# GF chipbreaker

Solving chip control issues leads to high-quality surface finishes

**The thin molded chipbreaker extends near the corner and reliably controls chips even in narrow spaces**

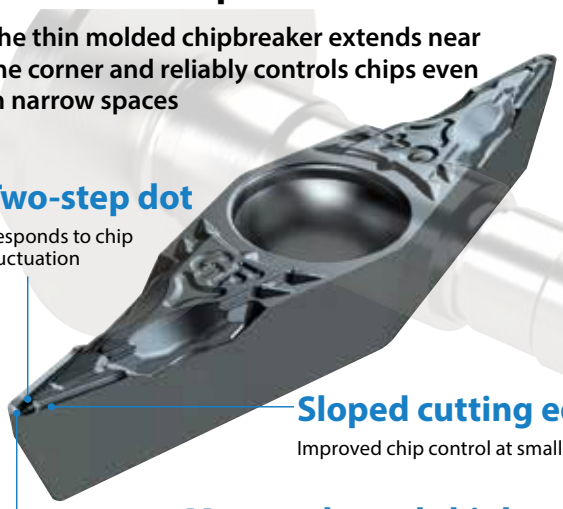

### Two-step dot

Responds to chip fluctuation

### Sloped cutting edge

Improved chip control at small D.O.C.

### Mortar-shaped chipbreaker

Low resistance and excellent chip control even in ductile workpieces

Chip control comparison
(Internal evaluation)

**GF chipbreaker**

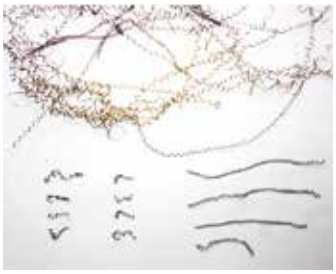

Competitor A (25 ° Type)

Cutting conditions : Vc = 230 m/min, f = 0.15 mm/rev, ap = 0.2 - 0.5 mm, Wet Workpiece material SCM435 Facing

## 15° Inserts are also available upon customer requests

To avoid holder interference, additional modifications is required as shown in the figure on the right. Also, as shown in the figure below, special order for holders may be required depending on machining application.

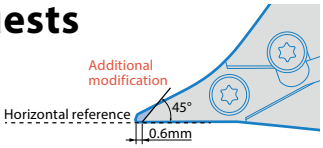


### Examples

When using the toolholder in reverse mounting position

When using the toolholder in normal mounting position
* Holder: Special order specification

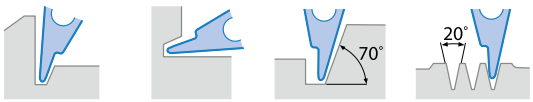


15 ° inserts are developed relative to 25 ° inserts
Helps avoid interference and supports a wider range of machining application

Corner-R 0.4

Double-blade design for turning and back turning

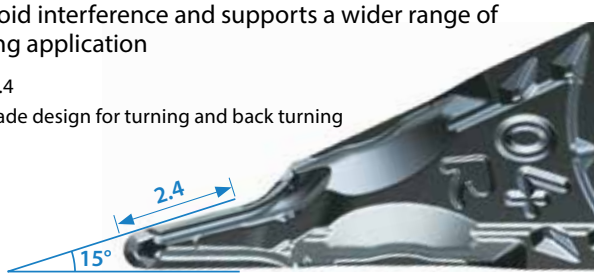

E

Small tools

## SZLB (External turning / External copying, Screw clamp, Coolant-though holder)

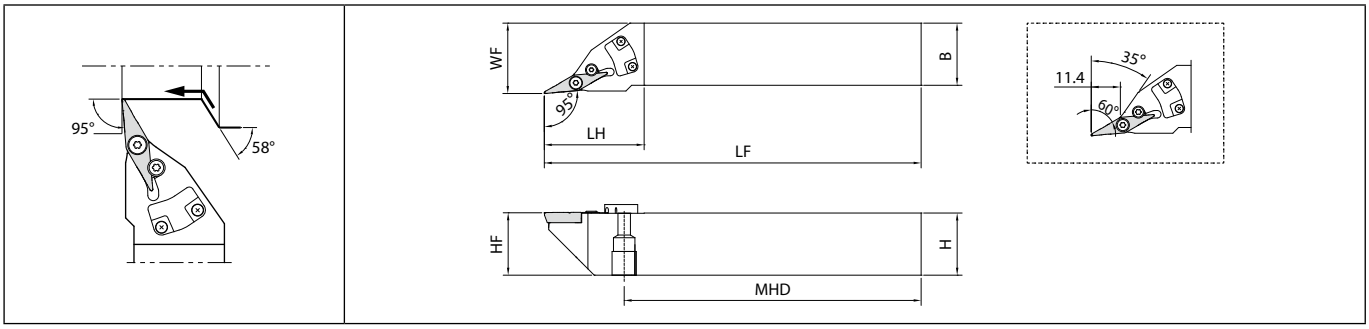


Right-hand shown | ZBMT13T304R-GF-15D is applicable to Right-hand Toolholder. | Applicable pressure : ~3MPa

### Toolholder dimensions

| Description | | Availability R | Availability L | Dimension (mm) H | B | LH | MHD | HF | LF | WF | Standard corner-R(RE) | Coolant hole | Spare parts: Clamper screw | Clamper | Screw | Wrench | Applicable inserts |
|---|---|---|---|---|---|---|---|---|---|---|---|---|---|---|---|---|---|
| SZLB R/L | 2020K-13C | ● | ● | 20 | 20 | 40 | 92.6 | 20 | 125 | 23 | 0.4 | Yes | BH2X6 | ZCP-13 | SB-3079TR | FT-8 | ZBMT13T3... |
| | 2525M-13C | ● | ● | 25 | 25 | | 118 | 25 | 150 | 28.2 | | | | | | | |

Please see page **D12** for piping parts of coolant-through holders.

## SZPB (External turning / External facing / External copying / Undercutting, Screw clamp, Coolant-though holder)

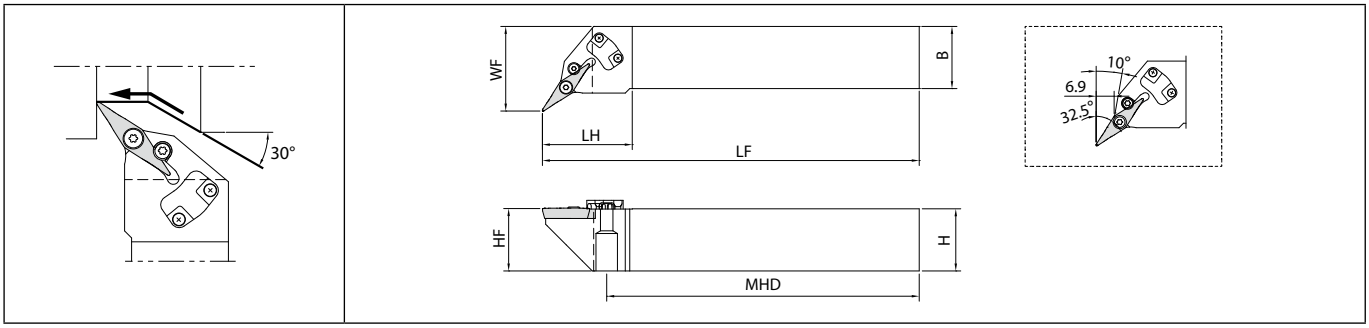


Right-hand shown | Applicable pressure : ~3MPa

### Toolholder dimensions

| Description | | Availability R | Availability L | Dimension (mm) H | B | LH | MHD | HF | LF | WF | Standard corner-R(RE) | Coolant hole | Spare parts: Clamper screw | Clamper | Screw | Wrench | Applicable inserts |
|---|---|---|---|---|---|---|---|---|---|---|---|---|---|---|---|---|---|
| SZPB R/L | 2020K-13C | ● | ● | 20 | 20 | 37 | 95 | 20 | 125 | 27.2 | 0.4 | Yes | BH2X6 | ZCP-13 | SB-3079TR | FT-8 | ZBMT13T3... |
| | 2525M-13C | ● | ● | 25 | 25 | 36 | 124.2 | 25 | 150 | 33.9 | | | | | | | |

Please see page **D12** for piping parts of coolant-through holders.

● : Standard item

## SZVB (External turning / External copying, Screw clamp, Coolant-though holder)

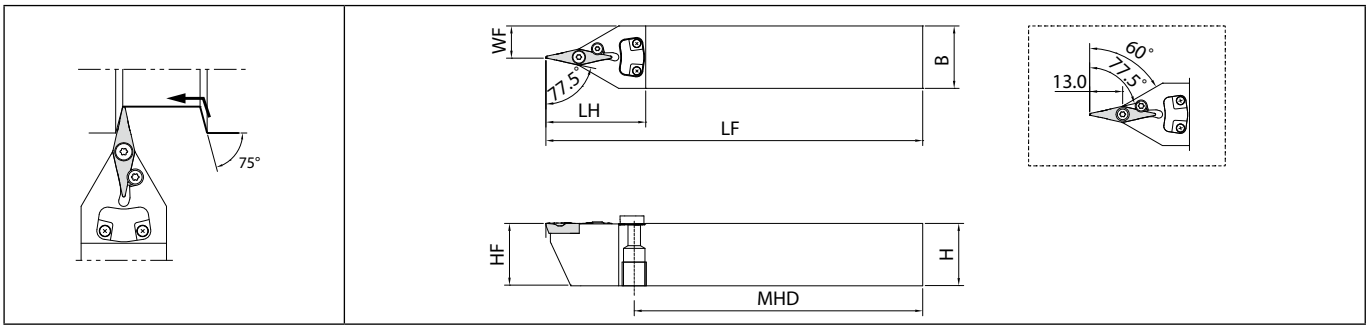


Applicable pressure : ~3MPa

## Toolholder dimensions

| Description | | Availability | Dimension (mm) | | | | | | | | Standard corner-R(RE) | Coolant hole | Spare parts | | | | Applicable inserts |
|---|---|---|---|---|---|---|---|---|---|---|---|---|---|---|---|---|---|
| | | | | | | | | | | | | | Clamper screw | Clamper | Screw | Wrench | |
| | | N | H | B | LH | MHD | HF | LF | WF | | | | | | | | |
| SZVBN | 2020K-13C | ● | 20 | 20 | 40 | 89.6 | 20 | 125 | 10 | 0.4 | Yes | BH2X6 | ZCP-13 | SB-3079TR | FT-8 | ZBMT13T3... |
| | 2525M-13C | ● | 25 | 25 | | 114.6 | 25 | 150 | 12.5 | | | | | | | |

Please see page **D12** for piping parts of coolant-through holders.

## Applicable inserts

| Applications | Finishing | Finishing | Non-ferrous metals |
|---|---|---|---|
| Insert | | | |
| Chipbreaker type | GF | R-GF-15D | NE |
| Page | B108 | B108 | C53 |

R-GF-15D inserts are only for the right-hand toolholders of SZLB.

Recommended cutting conditions ➔ **E68**

## Instructions

**When mounting the insert** (Tightening torque: 1.2 N·m)

1. Tighten the main screw with the insert pressed against the contact surface with fingertips.

2. Tighten the side screw to complete the installation.

**When removing the insert**

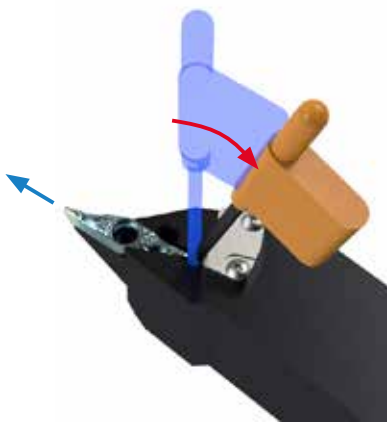

Remove the two screws and put the wrench into the gap at the back end of the insert. It can be easily removed by pushing out the insert as shown above.

● : Standard item

## S-SCLC (External turning / External facing)

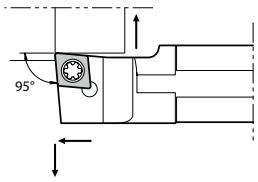


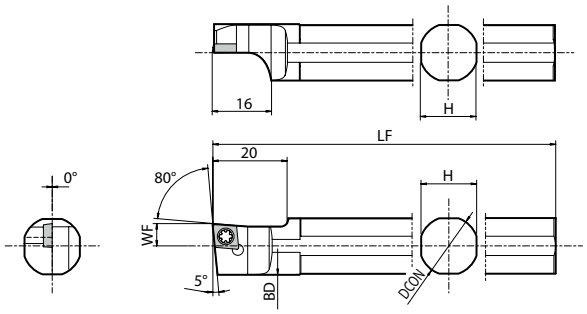


Left-hand shown | Right-hand Insert for Left-hand Toolholder.



## Toolholder dimensions

| Description | | Availability | Dimension (mm) | | | | | Standard corner-R(RE) | Spare parts | | | Applicable inserts |
|---|---|---|---|---|---|---|---|---|---|---|---|---|
| | | | | | | | | | Screw | Wrench | Wrench | |
| | | L | DCON | H | BD | LF | WF | | | | | |
| S12F- | SCLCL06 | ● | 12 | 11 | 13.4 | 80 | 6 | 0.4 | SB-2560TR | - | FT-8 | CC□T0602...<br>CC□W0602... |
| S14H- | SCLCL06 | ● | 14 | 13 | | 100 | | | | | | |
| S15F- | SCLCL06 | ● | 15.875 | 15 | 15.4 | 85 | | | SB-2570TR | | | |
| S16F- | SCLCL06 | ● | 16 | | | | | | | | | |
| S19G- | SCLCL06 | ● | 19.05 | 17 | 18.4 | 90 | | | | | | |
| S19K- | SCLCL06 | ● | | | | 120 | | | | | | |
| S20G- | SCLCL06 | ● | 20 | 18 | 19.4 | 90 | | | | | | |
| S20K- | SCLCL06 | ● | | | | 120 | | | | | | |
| S19G- | SCLCL09 | ● | 19.05 | 17 | 18.4 | 90 | 10 | 0.4 | SB-4065TR | FT-15 | - | CC□T09T3...<br>CC□W09T3... |
| S19K- | SCLCL09 | ● | | | | 120 | | | | | | |
| S20G- | SCLCL09 | ● | 20 | 18 | 19.4 | 90 | | | | | | |
| S20K- | SCLCL09 | ● | | | | 120 | | | | | | |
| S25.0H- | SCLCL09 | ● | 25 | 23 | 24.4 | 100 | | | | | | |
| S25K- | SCLCL09 | ● | 25.4 | | 24.8 | 120 | | | | | | |

## Applicable inserts

| Applications | Finishing | Finishing | Finishing | Finishing | Finishing | Finishing - Medium | Finishing | Finishing |
|---|---|---|---|---|---|---|---|---|
| Insert | | | | | | | | |
| Chipbreaker type | PF | GF | SKS | SK | CK | GQ | WP | PP |
| Page | B58 | B58 | B59 | B59 | B59 | B59 | B60 | B60 |
| Applications | Finishing - Medium | Finishing - Medium | Medium | Medium | Low feed | Low feed | Stainless steel / Heat-resistant alloys | Cast iron |
| Insert | | | | | | | | |
| Chipbreaker type | GK | HQ | STD | MF | R-U | R-J | MQ | No CB |
| Page | B60 | B60 | B60 | B61 | B63~B65 | B65 | B61 | B66 |
| Applications | Non-ferrous metals | Non-ferrous metals | Non-ferrous metals | Non-ferrous metals | Non-ferrous metals | Hard materials | | |
| Insert | | | | 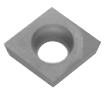 | | | | |
| Chipbreaker type | AP | R-A3 | AH | PCD | APD | CBN | | |
| Page | B66 | B66 | B66 | C39 | C40 | C20 | | |

Recommended cutting conditions ➡ E65, E66

● : Standard item

## S-SDUC (External turning / External copying)

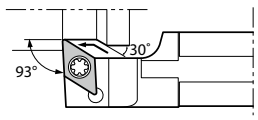


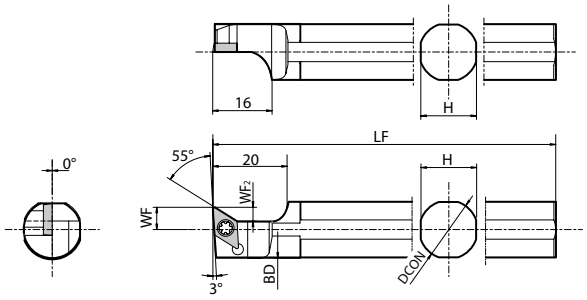


Left-hand shown | Right-hand Insert for Left-hand Toolholder.



## Toolholder dimensions

| Description | | Availability | Dimension (mm) | | | | | | Standard corner-R(RE) | Spare parts | | | Applicable inserts |
|---|---|---|---|---|---|---|---|---|---|---|---|---|---|
| | | | | | | | | | | Screw | Wrench | Wrench | |
| | | L | DCON | H | BD | LF | WF | WF2 | | | | | |
| S14H- | SDUCL07 | ● | 14 | 13 | 13.4 | 100 | 6 | 3.8 | 0.4 | SB-2560TR | - | FT-8 | DC□T0702...<br>DC□W0702...<br>DC□X0702... |
| S15F- | SDUCL07 | ● | 15.875 | 15 | 15.4 | 85 | | | | | | | |
| S19G- | SDUCL07 | ● | 19.05 | 17 | 18.4 | 90 | | | | | | | |
| S19K- | SDUCL07 | ● | | | | 120 | | | | | | | |
| S20G- | SDUCL07 | ● | 20 | 18 | 19.4 | 90 | | | | | | | |
| S20K- | SDUCL07 | ● | | | | 120 | | | | | | | |
| S19G- | SDUCL11 | ● | 19.05 | 17 | 18.4 | 90 | 10 | 5.8 | 0.4 | SB-4085TR | FT-15 | - | DC□T11T3...<br>DC□W11T3...<br>DC□X11T3... |
| S19K- | SDUCL11 | ● | | | | 120 | | | | | | | |
| S20G- | SDUCL11 | ● | 20 | 18 | 19.4 | 90 | | | | | | | |
| S20K- | SDUCL11 | ● | | | | 120 | | | | | | | |
| S22K- | SDUCL11 | ● | 22 | 20 | 21.4 | | | | | | | | |
| S25.0H- | SDUCL11 | ● | 25 | 23 | 24.4 | 100 | | | | | | | |
| S25K- | SDUCL11 | ● | 25.4 | | 24.8 | 120 | | | | | | | |

For WP chipbreaker, cutting edge offsets or program corrections are required on **R36** and **R37**.

● : Standard item

## S-SDLC (External turning / External copying)

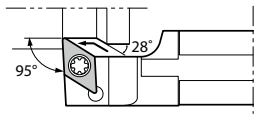


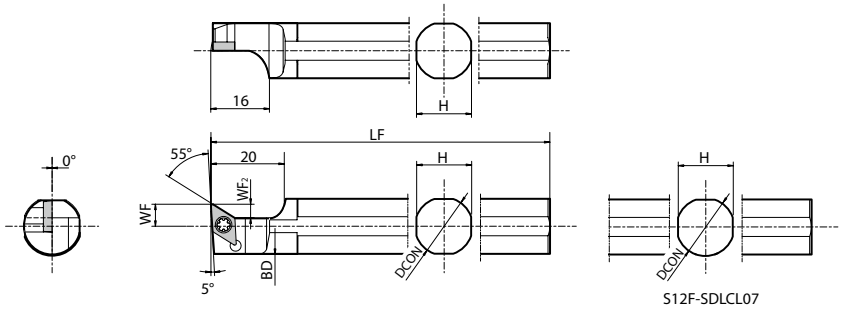


Left-hand shown | Right-hand Insert for Left-hand Toolholder.

## Toolholder dimensions

| Description | Availability | Dimension (mm) | | | | | | Standard corner-R(RE) | Spare parts | | | Applicable inserts |
|---|---|---|---|---|---|---|---|---|---|---|---|---|
| | | | | | | | | | Screw | Wrench | Wrench | |
| | L | DCON | H | BD | LF | WF | WF2 | | | | | |
| S12F- SDLCL07 | ● | 12 | 11 | 13.4 | 80 | 6 | 3.8 | 0.4 | SB-2560TR | - | FT-8 | DC□T0702...<br>DC□W0702... |
| S14H- SDLCL07 | ● | 14 | 13 | | 100 | | | | | | | |
| S15F- SDLCL07 | ● | 15.875 | 15 | 15.4 | 85 | | | | | | | |
| S16F- SDLCL07 | ● | 16 | | | | | | | | | | |
| S19G- SDLCL07 | ● | 19.05 | 17 | 18.4 | 90 | | | | | | | |
| S19K- SDLCL07 | ● | | | | 120 | | | | | | | |
| S20G- SDLCL07 | ● | 20 | 18 | 19.4 | 90 | | | | | | | |
| S20K- SDLCL07 | ● | | | | 120 | | | | | | | |
| S19G- SDLCL11 | ● | 19.05 | 17 | 18.4 | 90 | 10 | 5.8 | 0.4 | SB-4085TR | FT-15 | - | DC□T11T3...<br>DC□W11T3... |
| S19K- SDLCL11 | ● | | | | 120 | | | | | | | |
| S20G- SDLCL11 | ● | 20 | 18 | 19.4 | 90 | | | | | | | |
| S20K- SDLCL11 | ● | | | | 120 | | | | | | | |
| S22K- SDLCL11 | ● | 22 | 20 | 21.4 | | | | | | | | |
| S25.0H- SDLCL11 | ● | 25 | 23 | 24.4 | 100 | | | | | | | |
| S25K- SDLCL11 | ● | 25.4 | | 24.8 | 120 | | | | | | | |

● : Standard item

## Applicable inserts (S-SDUC / S-SDLC)

| Applications | Minute ap | Finishing | Finishing | Finishing | Finishing | Finishing - Medium | Finishing | Finishing |
|---|---|---|---|---|---|---|---|---|
| Insert | | | | | | | | |
| Chipbreaker type | CF | GF | SKS | SK | CK | GQ | WP* | R-WP* |
| Page | B68 | B68 | B68 | B68 | B68 | B69 | B69 | B69 |
| Applications | Finishing | Finishing | Finishing - Medium | Finishing - Medium | Medium | Medium | Finishing | Finishing |
| Insert | | | | | | | 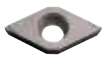 | |
| Chipbreaker type | PP | GP | GK | HQ | STD | MF | R-F | R-FSF |
| Page | B69 | B69 | B70 | B70 | B70 | B70 | B72, B73 | B72 |
| Applications | Low feed | Low feed | Low feed | Low feed | Low carbon steel | Low carbon steel | Stainless steel / Heat-resistant alloys | Cast iron |
| Insert | 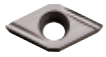 | 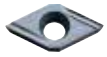 | | 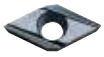 | | | | |
| Chipbreaker type | R-U | R-USF | R-J | R-JSF | XP | XQ | MQ | No CB |
| Page | B74~B76 | B74 | B77 | B76 | B71 | B71 | B71 | B78 |
| Applications | Non-ferrous metals | Non-ferrous metals | Non-ferrous metals | Non-ferrous metals | Non-ferrous metals | Hard materials | | |
| Insert | | | | | | | | |
| Chipbreaker type | AP | R-A3 | AH | PCD | APD | CBN | | |
| Page | B78 | B78 | B78 | C42 | C42 | C22 | | |

For WP chipbreaker, cutting edge offsets or program corrections are required on **R36** and **R37**. (**S-SDLC cannot be used**)

Recommended cutting conditions ➡ **E65, E66**

E

Small tools

## S-SVUB (External turning / External copying)

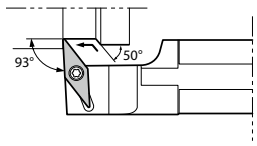


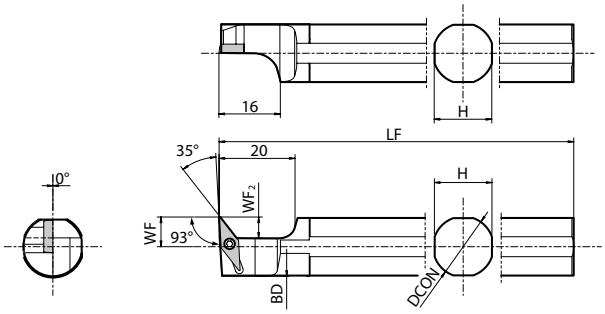


Left-hand shown | Right-hand Insert for Left-hand Toolholder.

## Toolholder dimensions

| Description | | Availability | Dimension (mm) | | | | | | Standard corner-R(RE) | Coolant hole | Spare parts | | Applicable inserts |
|---|---|---|---|---|---|---|---|---|---|---|---|---|---|
| | | | | | | | | | | | Screw | Wrench | |
| | | L | DCON | H | BD | LF | WF | $WF_2$ | | | | | |
| S19G- | SVUBL11 | ● | 19.05 | 17 | 18.4 | 90 | 10.5 | 8 | 0.4 | No | SB-2570TR | FT-8 | VB□T1103...<br>VB□W1103... |
| S19K- | SVUBL11 | ● | | | | 120 | | | | | | | |
| S20G- | SVUBL11 | ● | 20 | 18 | 19.4 | 90 | | | | | | | |
| S20K- | SVUBL11 | ● | | | | 120 | | | | | | | |
| S25.0H- | SVUBL11 | ● | 25 | 23 | 24.4 | 100 | | | | | | | |
| S25K- | SVUBL11 | ● | 25.4 | | 24.8 | 120 | | | | | | | |

## Applicable inserts

| Applications | Finishing | Finishing | Finishing | Finishing - Medium | Finishing | Finishing | Finishing - Medium | Non-ferrous metals |
|---|---|---|---|---|---|---|---|---|
| Insert | | | | | | | | |
| Chipbreaker type | PP | GP | VF | HQ | R-F | R-FSF | R-Y | PCD |
| Page | B97 | B97 | B97 | B97 | B98 | B98 | B99 | C49 |

| Applications | Hard materials |
|---|---|
| Insert | |
| Chipbreaker type | CBN |
| Page | C26 |

Recommended cutting conditions ➡ E65, E66

● : Standard item

## S-SVUC (External turning / External copying)

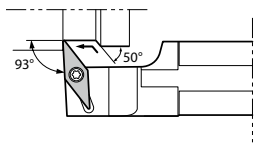


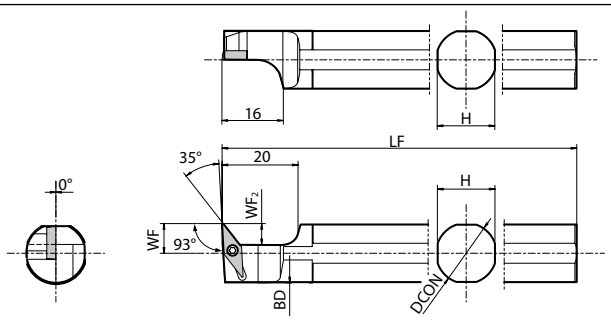


Left-hand shown | Right-hand Insert for Left-hand Toolholder.



## Toolholder dimensions

| Description | | Availability | Dimension (mm) | | | | | | Standard corner-R(RE) | Coolant hole | Spare parts | | Applicable inserts |
|---|---|---|---|---|---|---|---|---|---|---|---|---|---|
| | | | | | | | | | | | Screw | Wrench | |
| | | L | DCON | H | BD | LF | WF | WF2 | | | | | |
| S12F- | SVUCL08 | ● | 12 | 11 | 13.4 | 80 | 7.5 | 5.5 | 0.4 | No | SB-2050TR | FT-6 | VC□T0802...<br>VC□W0802... |
| S14H- | SVUCL08 | ● | 14 | 13 | | 100 | | | | | | | |
| S15F- | SVUCL08 | ● | 15.875 | 15 | 15.4 | 85 | 8 | | | | | | |
| S16F- | SVUCL08 | ● | 16 | | | | | | | | | | |
| S19G- | SVUCL11 | ● | 19.05 | 17 | 18.4 | 90 | 10.5 | 8 | 0.2 | No | SB-2570TR | FT-8 | VC□T1103... |
| S19K- | SVUCL11 | ● | | | | 120 | | | | | | | |
| S20G- | SVUCL11 | ● | 20 | 18 | 19.4 | 90 | | | | | | | |
| S20K- | SVUCL11 | ● | | | | 120 | | | | | | | |
| S25.0H- | SVUCL11 | ● | 25 | 23 | 24.4 | 100 | | | | | | | |
| S25K- | SVUCL11 | ● | 25.4 | | 24.8 | 120 | | | | | | | |

## Applicable inserts

| Applications | Minute ap | Finishing | Finishing | Finishing | Finishing | Finishing - Medium | Finishing | Finishing - Medium |
|---|---|---|---|---|---|---|---|---|
| Insert | | | | | | | | 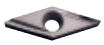 |
| Chipbreaker type | CF | GF | SKS | PP | VF | HQ | R-F | R-Y |
| Page | B100 | B100 | B100 | B100 | B100 | B100 | B101 | B101 |

| Applications | Non-ferrous metals | Hard materials |
|---|---|---|
| Insert | | |
| Chipbreaker type | PCD | CBN |
| Page | C50 | C27 |

Recommended cutting conditions ➡ E65, E66

● : Standard item

## SCLN-FF (External turning / External facing, Screw clamp, Without offset)

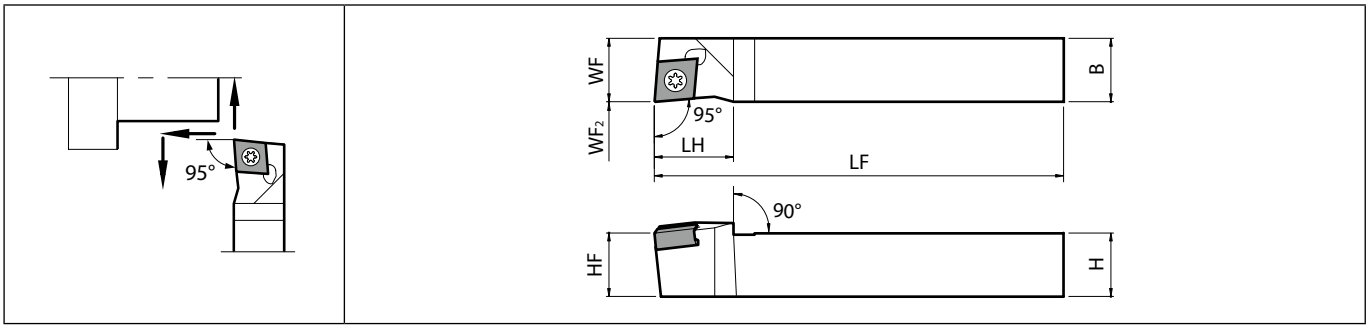


Right-hand shown



## Toolholder dimensions

| Description | | Availability | Dimension (mm) | | | | | | | Standard corner-R(RE) | Side rake angle (°) | Inclination angle (°) | Spare parts | | Applicable inserts |
|---|---|---|---|---|---|---|---|---|---|---|---|---|---|---|---|
| | | | | | | | | | | | | | Screw | Wrench | |
| | | R | H | B | LH | HF | LF | WF | WF₂ | | | | | | |
| SCLNR | 1010K-07FF | ● | 10 | 10 | 15 | 10 | 120 | 10 | 0 | 0.2 | -6 | -6 | SB-3080TR | LTW-10SS | CN□U0703... |
| | 1212F-07FF | ● | 12 | 12 | | 12 | 85 | 12 | | | | | | | |
| | 1212K-07FF | ● | | | | | 120 | | | | | | | | |
| | 1616K-07FF | ● | 16 | 16 | | 16 | | 16 | | | | | | | |

## Applicable inserts

| Applications | Finishing - Medium | Medium - Roughing | Finishing | Low feed |
|---|---|---|---|---|
| Insert | 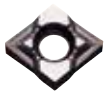 | | | 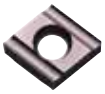 |
| Chipbreaker type | SK | GK | R-F | R-U |
| Page | B54 | B54 | B54 | B54 |

Recommended cutting conditions ➡ E62

● : Standard item

## SDLN-FF (External turning / External copying, Screw clamp, Without offset)

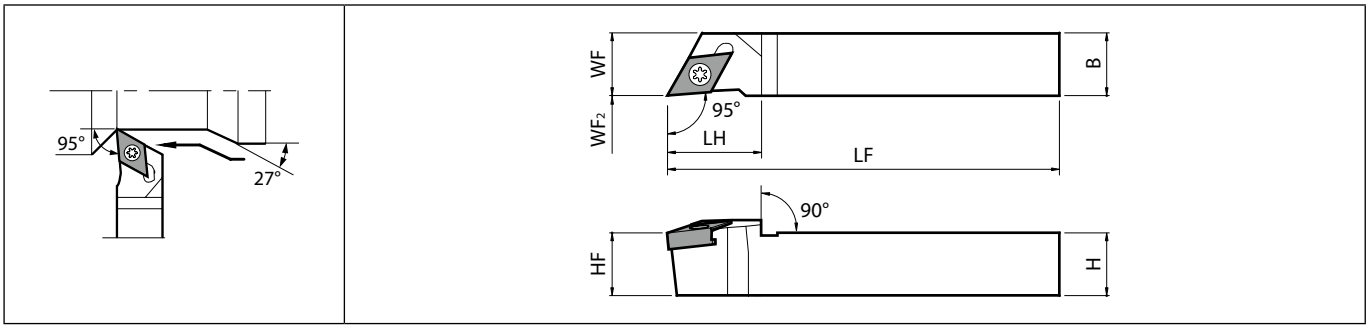


Right-hand shown

## Toolholder dimensions

| Description | | Availability | Dimension (mm) | | | | | | | Standard corner-R(RE) | Side rake angle (°) | Inclination angle (°) | Spare parts | | Applicable inserts |
|---|---|---|---|---|---|---|---|---|---|---|---|---|---|---|---|
| | | | | | | | | | | | | | Screw | Wrench | |
| | | R | H | B | LH | HF | LF | WF | WF2 | | | | | | |
| SDLNR | 1010K-08FF | ● | 10 | 10 | 18 | 10 | 120 | 10 | 0 | 0.2 | -6 | -7 | SB-3080TR | LTW-10SS | DN□U0803... |
| | 1212F-08FF | ● | 12 | 12 | | 12 | 85 | 12 | | | | | | | |
| | 1212K-08FF | ● | | | | | 120 | | | | | | | | |
| | 1616K-08FF | ● | 16 | 16 | | 16 | | 16 | | | | | | | |

## Applicable inserts

| Applications | Finishing - Medium | Medium - Roughing | Finishing | Low feed |
|---|---|---|---|---|
| Insert | | | | |
| Chipbreaker type | SK | GK | R-F | R-U |
| Page | B55 | B55 | B55 | B55 |

Recommended cutting conditions ➡ E62

● : Standard item

## STLN-FF (External turning, Screw clamp, Without offset)

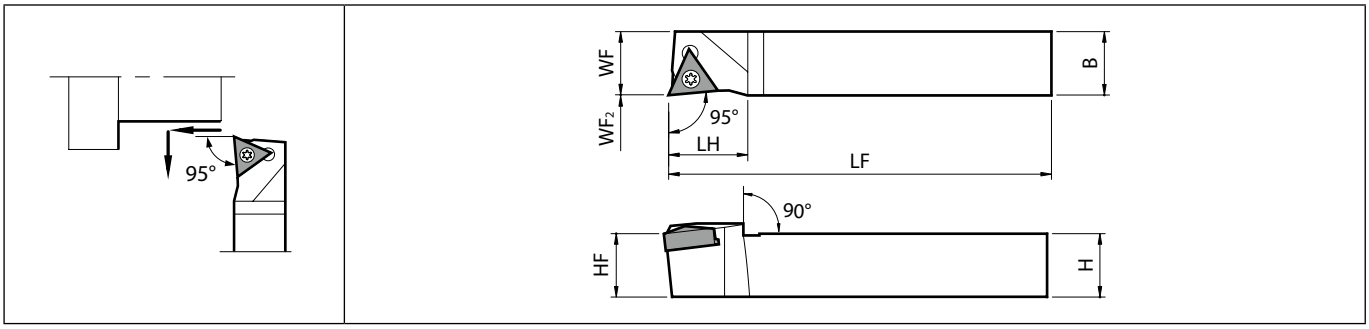


Right-hand shown



## Toolholder dimensions

| Description | | Availability | Dimension (mm) | | | | | | | Standard corner-R(RE) | Side rake angle (°) | Inclination angle (°) | Spare parts | | Applicable inserts |
|---|---|---|---|---|---|---|---|---|---|---|---|---|---|---|---|
| | | | | | | | | | | | | | Screw | Wrench | |
| | | R | H | B | LH | HF | LF | WF | WF2 | | | | | | |
| STLNR | 1010K-09FF | ● | 10 | 10 | 15 | 10 | 120 | 10 | 0 | 0.2 | -6 | -7 | SB-2570TR | LTW-8SS | TNGU0903... |
| | 1212F-09FF | ● | 12 | 12 | | 12 | 85 | 12 | | | | | | | |
| | 1212K-09FF | ● | | | | | 120 | | | | | | | | |
| | 1616K-09FF | ● | 16 | 16 | | 16 | | 16 | | | | | | | |

## Applicable inserts

| Applications | Finishing | Low feed |
|---|---|---|
| Insert | | |
| Chipbreaker type | R-F | R-U |
| Page | B56 | B56 |

## Recommended cutting conditions

| Workpiece material | PR1225 | PR1535 | PR1705 | PR1725 |
|---|---|---|---|---|
| Free-cutting steel | - | - | ● Vc = 100 m/min 60 ~ 150 | ◌ Vc = 100 m/min 60 ~ 150 |
| Carbon steel / Alloy steel | ◌ Vc = 100 m/min 60 ~ 150 | ◌ Vc = 100 m/min 60 ~ 150 | ◌ Vc = 130 m/min 60 ~ 220 | ● Vc = 130 m/min 60 ~ 200 |
| Stainless steel | ◌ Vc = 80 m/min 50 ~ 150 | ● Vc = 100 m/min 60 ~ 180 | - | ◌ Vc = 100 m/min 80 ~ 150 |

● : Continuous to light interruption: 1st recommendation
◌ : Continuous to light interruption: 2nd recommendation

● : Standard item

## PCLN-FF (External turning / External facing, Without offset)

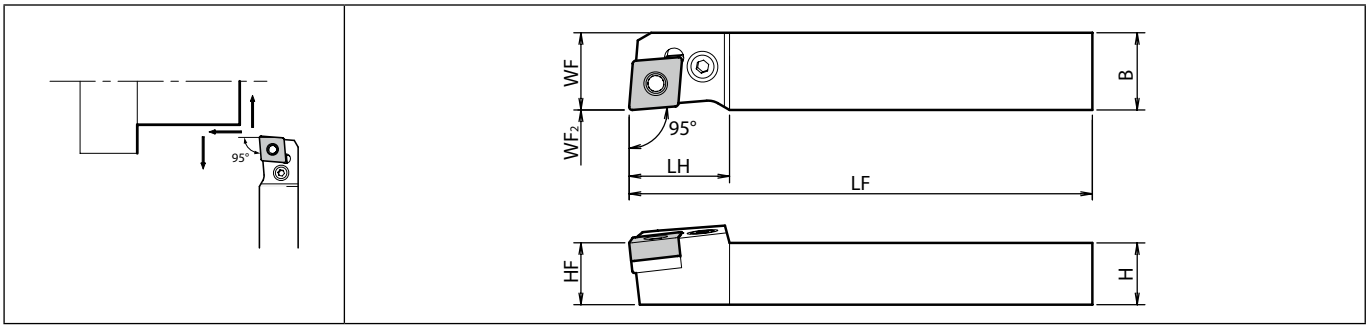


Right-hand shown

## Toolholder dimensions

| Description | | Availability | Dimension (mm) | | | | | | | Standard corner-R(RE) | Side rake angle (°) | Inclination angle (°) | Spare parts | | | | | | Applicable inserts |
|---|---|---|---|---|---|---|---|---|---|---|---|---|---|---|---|---|---|---|---|
| | | | | | | | | | | | | | Lever | Lock screw | Punch | Shim pin | Shim | Wrench | |
| | | R | H | B | LH | HF | LF | WF | WF2 | | | | | | | | | | |
| PCLNR | 1620JX-12FF | ● | 16 | 20 | 26 | 16 | 120 | 20 | 0 | 0.8 | -6 | -6 | LL-2N | LS-2N | PC-2 | LSP-2 | LC-42N | LW-3 | CN□G1204... |
| | 2020JX-12FF | ● | 20 | | | 20 | | | | | | | | | | | | | |

## Applicable inserts

| Applications | Finishing - Medium | Medium - Roughing |
|---|---|---|
| Insert | | |
| Chipbreaker type | SK | FP-TK |
| Page | B20 | B20 |

Recommended cutting conditions ➡ E62

● : Standard item

## PTLN-FF (External turning, Without offset)

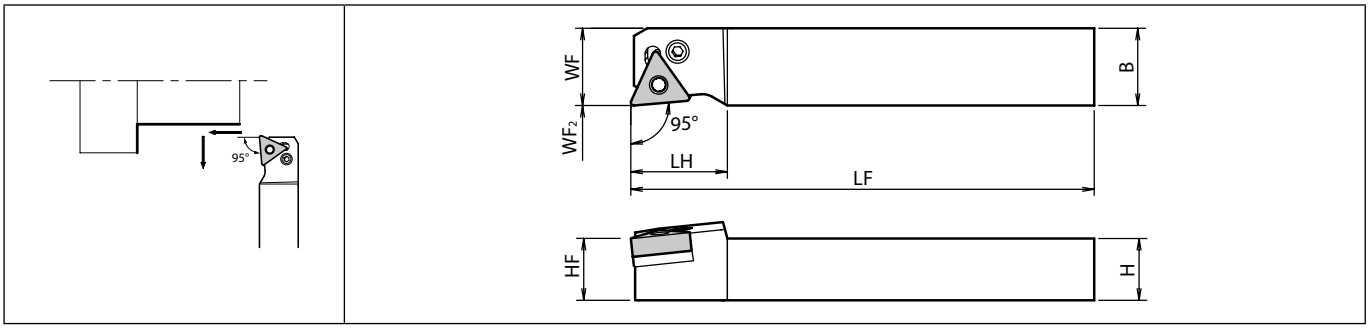


Right-hand shown

## Toolholder dimensions

| Description | | Availability | Dimension (mm) | | | | | | | Standard corner-R(RE) | Side rake angle (°) | Inclination angle (°) | Spare parts | | | | | | Applicable inserts |
|---|---|---|---|---|---|---|---|---|---|---|---|---|---|---|---|---|---|---|---|
| | | | | | | | | | | | | | Lever | Lock screw | Punch | Shim pin | Shim | Wrench | |
| | | R | H | B | LH | HF | LF | WF | WF2 | | | | | | | | | | |
| PTLNR | 1620JX-16FF | ● | 16 | 20 | 24 | 16 | 120 | 20 | 0 | 0.8 | -6 | -6 | LL-1N | LS-1N | PC-1 | LSP-1 | LT-32N<br>*LT-32N-20 | FH-2.5 | TN□G1604... |
| | 2020JX-16FF | ● | 20 | | | 20 | | | | | | | | | | | | | |

When using inserts whose corner-R(RE) is greater than 1.6 mm, please purchase a shim* and use it in order to prevent workpiece and shim from interfering each other.

## Applicable inserts

| Applications | Finishing - Medium | Medium - Roughing | Large ap |
|---|---|---|---|
| Insert | | | |
| Chipbreaker type | SK | FP-TK | R-LD |
| Page | B41 | B41 | B41 |

Recommended cutting conditions ➡ E62

● : Standard item

External turning (positive insert) - cutting diameter under ø16mm

| ISO classification | Workpiece material | Hardness | Cutting range | Applications | Chipbreaker | Insert grade | Corner-R (RE) | Lower limit - **Recommendation** - Upper limit | | |
|---|---|---|---|---|---|---|---|---|---|---|
| | | | | | | | | Vc (m/min) | ap (mm) | f (mm/rev) |
| P* | Low carbon steel<br>Low carbon alloy | HB ≤ 300 | Precision finishing | Continuous | F | PR1725 | 0.05 | 100 - **150** - 200 | 0.05 - **0.07** - 0.15 | 0.03 - **0.05** - 0.1 |
| | | | | Interruption | | PR1725 | 0.2 | 80 - **120** - 160 | 0.05 - **0.1** - 0.2 | 0.03 - **0.1** - 0.15 |
| | | | Precision finishing<br>Molded chipbreaker | Continuous | CF | PR1725 | 0.2 | 100 - **150** - 200 | 0.02 - **0.05** - 0.1 | 0.02 - **0.05** - 0.12 |
| | | | Finishing | Continuous | SKS | PR1725 | 0.2 | 100 - **140** - 180 | 0.2 - **0.5** - 1.0 | 0.05 - **0.1** - 0.2 |
| | | | | Interruption | | PR1725 | 0.4 | 80 - **120** - 160 | 0.2 - **0.5** - 1.0 | 0.05 - **0.1** - 0.2 |
| | | | Finishing-Medium | Continuous | SK | PR1725 | 0.2 | 80 - **120** - 160 | 0.8 - **3.0** - 5.0 | 0.03 - **0.05** - 0.1 |
| | | | | Interruption | | PR1725 | 0.4 | 60 - **100** - 140 | 0.8 - **2.0** - 3.0 | 0.03 - **0.05** - 0.1 |
| | | | Low feed & Large ap | Continuous | J, U | PR1725 | 0.2 | 80 - **100** - 140 | 0.5 - **2.0** - 3.5 | 0.02 - **0.05** - 0.1 |
| | Medium carbon steel<br>Medium carbon alloy | HB ≤ 330 | Precision finishing | Continuous | F | PR1725 | 0.05 | 100 - **150** - 200 | 0.05 - **0.07** - 0.15 | 0.03 - **0.05** - 0.1 |
| | | | | Interruption | | PR1725 | 0.2 | 80 - **120** - 160 | 0.05 - **0.1** - 0.2 | 0.03 - **0.1** - 0.15 |
| | | | Precision finishing<br>Molded chipbreaker | Continuous | CF | PR1725 | 0.2 | 100 - **150** - 200 | 0.02 - **0.05** - 0.1 | 0.02 - **0.05** - 0.12 |
| | | | Finishing | Continuous | SKS | PR1725 | 0.2 | 100 - **140** - 180 | 0.2 - **0.5** - 1.0 | 0.05 - **0.1** - 0.2 |
| | | | | Interruption | | PR1725 | 0.4 | 80 - **120** - 160 | 0.2 - **0.5** - 1.0 | 0.05 - **0.1** - 0.2 |
| | | | Finishing-Medium | Continuous | SK | PR1725 | 0.2 | 80 - **120** - 160 | 0.8 - **3.0** - 5.0 | 0.03 - **0.05** - 0.1 |
| | | | | Interruption | | PR1725 | 0.4 | 60 - **100** - 140 | 0.8 - **2.0** - 3.0 | 0.03 - **0.05** - 0.1 |
| | | | Low feed & Large ap | Continuous | J, U | PR1725 | 0.2 | 80 - **100** - 140 | 0.5 - **2.0** - 3.5 | 0.02 - **0.05** - 0.1 |
| | High carbon alloy | HB ≤ 280 | Precision finishing | Continuous | F | PR1725 | 0.05 | 100 - **150** - 200 | 0.05 - **0.07** - 0.15 | 0.03 - **0.05** - 0.1 |
| | | | | Interruption | | PR1725 | 0.2 | 80 - **120** - 160 | 0.05 - **0.1** - 0.2 | 0.03 - **0.1** - 0.15 |
| | | | Precision finishing<br>Molded chipbreaker | Continuous | CF | PR1725 | 0.2 | 100 - **150** - 200 | 0.02 - **0.05** - 0.1 | 0.02 - **0.05** - 0.12 |
| | | | Finishing | Continuous | SKS | PR1725 | 0.2 | 100 - **140** - 180 | 0.2 - **0.5** - 1.0 | 0.05 - **0.1** - 0.2 |
| | | | | Interruption | | PR1725 | 0.4 | 80 - **120** - 160 | 0.2 - **0.5** - 1.0 | 0.05 - **0.1** - 0.2 |
| | | | Finishing-Medium | Continuous | SK | PR1725 | 0.2 | 80 - **120** - 160 | 0.3 - **1.5** - 3.0 | 0.03 - **0.05** - 0.1 |
| | | | | Interruption | | PR1725 | 0.4 | 60 - **100** - 140 | 0.3 - **1.0** - 2.0 | 0.03 - **0.05** - 0.1 |
| | | | Low feed & Large ap | Continuous | J, U | PR1725 | 0.2 | 80 - **100** - 140 | 0.5 - **2.0** - 3.5 | 0.02 - **0.05** - 0.1 |
| M | Stainless steel<br>(Austenitic related) | HB ≤ 220 | Finishing | Continuous | SKS | PR1725 | 0.2 | 80 - **100** - 120 | 0.1 - **0.3** - 0.5 | 0.03 - **0.05** - 0.1 |
| | | | | Interruption | | PR1535 | 0.4 | 60 - **80** - 100 | 0.3 - **0.5** - 1.0 | 0.05 - **0.1** - 0.15 |
| | | | Medium | Continuous | SK | PR1725 | 0.2 | 80 - **100** - 120 | 0.5 - **1.5** - 3.0 | 0.03 - **0.08** - 0.12 |
| | | | | Interruption | | PR1535 | 0.4 | 60 - **80** - 100 | 0.5 - **1.0** - 2.0 | 0.05 - **0.1** - 0.15 |
| | Stainless steel<br>(Precipitation hardening) | HB ≤ 300 | Finishing | Continuous | SKS | PR1725 | 0.2 | 40 - **60** - 80 | 0.1 - **0.3** - 0.5 | 0.03 - **0.05** - 0.1 |
| | | | | Interruption | | PR1535 | 0.4 | 30 - **50** - 70 | 0.3 - **0.5** - 1.0 | 0.05 - **0.1** - 0.15 |
| | | | Medium | Continuous | SK | PR1725 | 0.2 | 40 - **60** - 80 | 0.5 - **1.0** - 2.0 | 0.03 - **0.08** - 0.12 |
| | | | | Interruption | | PR1535 | 0.4 | 30 - **50** - 70 | 0.5 - **1.0** - 1.5 | 0.05 - **0.1** - 0.15 |

* For machining free-cutting steels, such as SUM, etc. use PR1705 at Vc = 200 m/min or less.
For ap and f, refer to specs for low carbon steels.

External turning (positive insert) - cutting diameter under ø16mm

| ISO classification | Workpiece material | Hardness | Cutting range | Applications | Chipbreaker | Insert grade | Corner-R (RE) | Lower limit - **Recommendation** - Upper limit | | |
|---|---|---|---|---|---|---|---|---|---|---|
| | | | | | | | | Vc (m/min) | ap (mm) | f (mm/rev) |
| K | Gray cast iron | HB ≤ 250 | Finishing | Continuous | Standard | CA310 | 0.4 | 100 - **120** - 150 | 0.2 - **0.5** - 1.0 | 0.1 - **0.15** - 0.2 |
| | | | | Interruption | | CA315 | 0.4 | 80 - **100** - 120 | 0.2 - **0.5** - 1.0 | 0.05 - **0.1** - 0.15 |
| | | | Medium | Continuous | Standard | CA310 | 0.4 | 100 - **120** - 150 | 0.5 - **1.0** - 2.0 | 0.1 - **0.15** - 0.2 |
| | | | | Interruption | | CA315 | 0.8 | 80 - **100** - 120 | 0.5 - **1.0** - 2.0 | 0.05 - **0.1** - 0.15 |
| | Nodular cast iron | HB ≤ 270 | Finishing | Continuous | Standard | CA310 | 0.4 | 80 - **100** - 120 | 0.2 - **0.5** - 1.0 | 0.1 - **0.15** - 0.2 |
| | | | | Interruption | | CA315 | 0.4 | 60 - **80** - 100 | 0.2 - **0.5** - 1.0 | 0.05 - **0.1** - 0.15 |
| | | | Medium | Continuous | Standard | CA310 | 0.4 | 80 - **100** - 120 | 0.5 - **1.0** - 2.0 | 0.1 - **0.15** - 0.2 |
| | | | | Interruption | | CA315 | 0.8 | 60 - **80** - 100 | 0.5 - **1.0** - 2.0 | 0.05 - **0.1** - 0.15 |
| N | Non-ferrous metals<br>Copper alloy<br>Aluminum<br>Aluminum alloys<br>(Si10% or less) etc. | HB ≤ 100 | High speed machining (Rainbow surface gloss) | Continuous | Without chipbreaker | KPD001 | 0.2 | 150 - **250** - 350 | 0.05 - **0.1** - 0.3 | 0.05 - **0.1** - 0.15 |
| | | | Finishing (Long tool life) | Continuous | F | PDL025 | 0.2 | 100 - **150** - 200 | 0.05 - **0.3** - 0.5 | 0.02 - **0.07** - 0.1 |
| | | | | Interruption | | PDL025 | 0.4 | 100 - **150** - 200 | 0.05 - **0.3** - 0.5 | 0.02 - **0.07** - 0.1 |
| | | | Finishing | Continuous | F | KW10 | 0.2 | 100 - **150** - 200 | 0.05 - **0.3** - 0.5 | 0.02 - **0.07** - 0.1 |
| | | | | Interruption | | KW10 | 0.4 | 100 - **150** - 200 | 0.05 - **0.3** - 0.5 | 0.02 - **0.07** - 0.1 |
| | | | Medium | Continuous | U | KW10 | 0.2 | 100 - **150** - 200 | 0.2 - **0.5** - 1.5 | 0.03 - **0.1** - 0.2 |
| | | | | Interruption | | KW10 | 0.4 | 100 - **150** - 200 | 0.2 - **0.5** - 1.5 | 0.03 - **0.1** - 0.2 |
| S | Titanium alloys | HB ≤ 400 | Precision finishing (Rainbow surface gloss) | Continuous | Without chipbreaker | KPD001 | 0.2 | 100 - **120** - 150 | 0.05 - **0.1** - 0.3 | 0.03 - **0.07** - 0.1 |
| | | | | Interruption | | KPD001 | 0.4 | 70 - **100** - 120 | 0.05 - **0.1** - 0.3 | 0.03 - **0.07** - 0.1 |
| | | | Medium | Continuous | F, U | KW10 | 0.4 | 30 - **50** - 70 | 0.1 - **0.5** - 1.0 | 0.03 - **0.1** - 0.2 |
| | | | | Interruption | | KW10 | 0.4 | 30 - **50** - 70 | 0.1 - **0.5** - 1.0 | 0.03 - **0.1** - 0.2 |
| | Heat-resistant alloys | HB ≤ 350 | Finishing | Continuous | F, U | KW10 | 0.4 | 10 - **30** - 50 | 0.1 - **0.3** - 0.5 | 0.03 - **0.05** - 0.1 |
| | | | | Interruption | Without chipbreaker | KW10 | 0.8 | 10 - **30** - 50 | 0.2 - **0.5** - 0.7 | 0.03 - **0.05** - 0.1 |
| | | | Finishing | Continuous | MQ | PR1535 | 0.4 | 40 - **60** - 80 | 0.1 - **0.3** - 0.5 | 0.03 - **0.05** - 0.1 |
| | | | | Interruption | | PR1535 | 0.8 | 40 - **60** - 80 | 0.1 - **0.3** - 0.5 | 0.03 - **0.05** - 0.1 |
| H | Hardened steel<br>Hard materials | 40 ~ 50 HRC | Finishing | Continuous | GK | PR1725 | 0.2 | 40 - **60** - 80 | 0.1 - **0.3** - 0.5 | 0.02 - **0.07** - 0.1 |
| | | | | Interruption | | PR1725 | 0.4 | 40 - **60** - 80 | 0.1 - **0.3** - 0.5 | 0.02 - **0.07** - 0.1 |
| | | 50 ~ 68 HRC | Finishing | Continuous | ME | KBN010 | 0.2 | 80 - **120** - 150 | 0.1 - **0.3** - 0.5 | 0.02 - **0.07** - 0.1 |
| | | | | Interruption | MET | KBN020 | 0.4 | 60 - **100** - 120 | 0.1 - **0.3** - 0.5 | 0.02 - **0.07** - 0.1 |

# Back Turning - cutting diameter under ø16mm

KTKF

| Workpiece material | | MEGACOAT NANO PLUS | | MEGACOAT NANO | | MEGACOAT | | Remarks |
|---|---|---|---|---|---|---|---|---|
| | | PR1725 | | PR1535 | | PR1225 | | |
| | | Grooving | Turning | Grooving | Turning | Grooving | Turning | |
| Carbon steel / Alloy steel | Vc (m/min) | ★60 ~ 200 | | ☆60 ~ 150 | | ☆60 ~ 150 | | Coolant |
| | f (mm/rev) | 0.01 ~ 0.03 | 0.02 ~ 0.15 | 0.01 ~ 0.03 | 0.02 ~ 0.15 | 0.01 ~ 0.03 | 0.02 ~ 0.15 | |
| Stainless steel | Vc (m/min) | ☆60 ~ 150 | | ★60 ~ 130 | | ☆60 ~ 130 | | |
| | f (mm/rev) | 0.01 ~ 0.02 | 0.02 ~ 0.1 | 0.01 ~ 0.02 | 0.02 ~ 0.1 | 0.01 ~ 0.02 | 0.02 ~ 0.1 | |

| Workpiece material | | Carbide | | PCD | | Remarks |
|---|---|---|---|---|---|---|
| | | KW10 | | KPD001 | | |
| | | Grooving | Turning | Grooving | Turning | |
| Cast iron | Vc (m/min) | 50 ~ 100 | | - | | Coolant |
| | f (mm/rev) | 0.01 ~ 0.02 | 0.02 ~ 0.15 | - | | |
| Aluminum | Vc (m/min) | 200 ~ 450 | | 200 ~ 500 | | |
| | f (mm/rev) | 0.01 ~ 0.03 | 0.02 ~ 0.15 | 0.01 ~ 0.03 | 0.02 ~ 0.12 | |
| Brass | Vc (m/min) | 100 ~ 200 | | 100 ~ 350 | | |
| | f (mm/rev) | 0.01 ~ 0.05 | 0.02 ~ 0.2 | 0.01 ~ 0.05 | 0.02 ~ 0.15 | |

KTKF (GTP chipbreaker)

| Workpiece material | | MEGACOAT NANO PLUS | | MEGACOAT NANO | | Remarks |
|---|---|---|---|---|---|---|
| | | PR1725 | | PR1535 | | |
| | | Grooving | Turning | Grooving | Turning | |
| Carbon steel / Alloy steel | Vc (m/min) | ★60 ~ 200 | | ☆60 ~ 150 | | Coolant |
| | f (mm/rev) | 0.03~0.07 | 0.05~0.15 | 0.03~0.07 | 0.05~0.15 | |
| Stainless steel | Vc (m/min) | ☆60 ~ 150 | | ★60 ~ 130 | | |
| | f (mm/rev) | 0.02~0.05 | 0.03~0.10 | 0.02~0.05 | 0.03~0.10 | |

KTKF (GQ chipbreaker)

| Workpiece material | | MEGACOAT NANO PLUS | | MEGACOAT NANO | | MEGACOAT | | Remarks |
|---|---|---|---|---|---|---|---|---|
| | | PR1725 | | PR1535 | | PR1225 | | |
| | | Grooving | Turning | Grooving | Turning | Grooving | Turning | |
| Carbon steel / Alloy steel | Vc (m/min) | ★60 ~ 200 | | ☆60 ~ 150 | | ☆60 ~ 150 | | Coolant |
| | f (mm/rev) | 0.01 ~ 0.04 | 0.02 ~ 0.15 | 0.01 ~ 0.04 | 0.02 ~ 0.15 | 0.01 ~ 0.04 | 0.02 ~ 0.15 | |
| Stainless steel | Vc (m/min) | ☆60 ~ 150 | | ★60 ~ 130 | | ☆60 ~ 130 | | |
| | f (mm/rev) | 0.01 ~ 0.03 | 0.02 ~ 0.1 | 0.01 ~ 0.03 | 0.02 ~ 0.1 | 0.01 ~ 0.03 | 0.02 ~ 0.1 | |

KTKF (AGT chipbreaker)

| Workpiece material | | PCD | | Remarks |
|---|---|---|---|---|
| | | KPD001 | | |
| | | Grooving | Turning | |
| Aluminum alloy | Vc (m/min) | 200 ~ 500 | | Coolant |
| | f (mm/rev) | 0.03 ~ 0.15 | 0.03 ~ 0.20 | |
| Brass | Vc (m/min) | 100 ~ 350 | | |
| | f (mm/rev) | 0.03 ~ 0.15 | 0.03 ~ 0.20 | |

ABS15, ABW15, ABW23

| Workpiece material | | MEGACOAT NANO PLUS | | | | MEGACOAT | | PVD coated carbide | | Remarks |
|---|---|---|---|---|---|---|---|---|---|---|
| | | PR1725 | | PR1705 | | PR1225 | | PR930 | | |
| | | Grooving | Turning | Grooving | Turning | Grooving | Turning | Grooving | Turning | |
| Carbon steel / Alloy steel | Vc (m/min) | ★60 ~ 180 | | ☆80 ~ 200 | | ☆60 ~ 150 | | ☆80 ~ 100 | | Coolant |
| | f (mm/rev) | 0.02 | 0.02 ~ 0.07 | 0.02 | 0.02 ~ 0.07 | 0.02 | 0.02 ~ 0.07 | 0.02 | 0.02 ~ 0.07 | |
| Stainless steel | Vc (m/min) | ☆30 ~ 130 | | ☆40 ~ 150 | | ★40 ~ 120 | | ☆30 ~ 50 | | |
| | f (mm/rev) | 0.02 | 0.02 ~ 0.05 | 0.02 | 0.02 ~ 0.05 | 0.02 | 0.02 ~ 0.05 | 0.02 | 0.02 ~ 0.05 | |

| Workpiece material | | Carbide | | Remarks |
|---|---|---|---|---|
| | | KW10 | | |
| | | Grooving | Turning | |
| Aluminum | Vc (m/min) | 150 ~ 200 | | Coolant |
| | f (mm/rev) | 0.02 | 0.02 ~ 0.10 | |
| Brass | Vc (m/min) | 100 ~ 160 | | |
| | f (mm/rev) | 0.03 | 0.02 ~ 0.15 | |

★: 1st recommendation
☆: 2nd recommendation

## ZBMT

| Workpiece material | Insert tip angle | Corner-R (RE) | Insert grade | Vc (m/min) | ap (mm) | f (mm/rev) |
|---|---|---|---|---|---|---|
| Carbon steel / Alloy steel | 25° | 0.2 | PR1725 | 60 - **150** - 200 | 0.2 - **0.3** - 1.5 | 0.05 - **0.10** - 0.15 |
| | | | PR1535 | 60 - **120** - 180 | 0.2 - **0.3** - 1.5 | 0.05 - **0.10** - 0.15 |
| | | 0.4 / 0.8 | PR1725 | 60 - **150** - 200 | 0.2 - **0.3** - 2.0 | 0.05 - **0.15** - 0.25 |
| | | | PR1535 | 60 - **120** - 180 | 0.2 - **0.3** - 2.0 | 0.05 - **0.15** - 0.25 |
| | 15° | 0.4 | PR1725 | 60 - **150** - 200 | 0.2 - **0.3** - 1.0 | 0.05 - **0.10** - 0.15 |
| | | | PR1535 | 60 - **120** - 180 | 0.2 - **0.3** - 1.0 | 0.05 - **0.10** - 0.15 |
| Stainless steel | 25° | 0.2 | PR1725 | 60 - **150** - 180 | 0.2 - **0.3** - 1.0 | 0.05 - **0.10** - 0.15 |
| | | | PR1535 | 60 - **120** - 150 | 0.2 - **0.3** - 1.0 | 0.05 - **0.10** - 0.15 |
| | | 0.4 / 0.8 | PR1725 | 60 - **150** - 180 | 0.2 - **0.3** - 1.0 | 0.05 - **0.15** - 0.25 |
| | | | PR1535 | 60 - **120** - 150 | 0.2 - **0.3** - 1.0 | 0.05 - **0.15** - 0.25 |
| | 15° | 0.4 | PR1725 | 60 - **150** - 180 | 0.2 - **0.3** - 1.0 | 0.05 - **0.10** - 0.15 |
| | | | PR1535 | 60 - **120** - 150 | 0.2 - **0.3** - 1.0 | 0.05 - **0.10** - 0.15 |
| Cast iron | 25° | 0.2 | PR1725 | 60 - **150** - 180 | 0.2 - **0.3** - 1.5 | 0.05 - **0.10** - 0.15 |
| | | 0.4 / 0.8 | PR1725 | 60 - **150** - 180 | 0.2 - **0.3** - 2.0 | 0.05 - **0.15** - 0.25 |
| | 15° | 0.4 | PR1725 | 60 - **150** - 180 | 0.2 - **0.3** - 1.0 | 0.05 - **0.10** - 0.15 |

When using machining at ap 1.5 mm or more, reduce the feed by about 50%.

## Boring/Facing available cutting diameter and maximum D.O.C.

Standard corner-R(RE) 0.4

| Cutting Dia. | Depth (mm) |
|---|---|
| ø30 | 0.5 |
| ø50 | 1.5 |
| ø65 | 3.0 |
| ø80 | 6.0 |
| ø100 | 10.0 |
| ø150 | 14.0 |

## SZPB type cutting diameter for undercutting

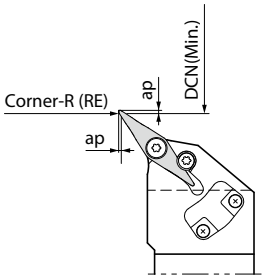


| Corner-R (RE) | ap (mm) | DCN (Min.) |
|---|---|---|
| 0.2 | 0.5 | ø30 |
| | 1 | ø35 |
| 0.4 | 0.5 | ø30 |
| | 1 | ø35 |
| 0.8 | 0.5 | ø110 |
| | 1 | ø150 |

## How to modify toolholder when using 15 ° insert

**When using 15 ° insert, additional modification is required for the holder to avoid interference.**

### Recommended additional modification
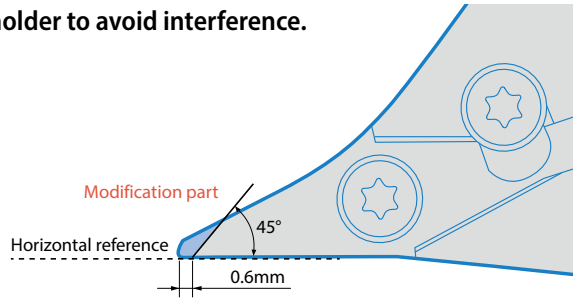
- Set the edge of insert bearing surface at the end of the holder at horizontal reference shown below.
- Modify the holder to 0.6 mm from the tip at an angle of not less than 45 degrees from the horizontal.